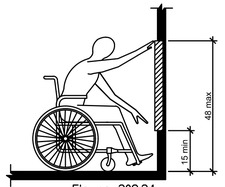

Figure 308.2.1
Unobstructed Forward Reach

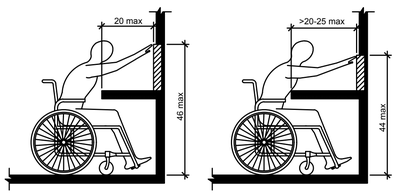

Figure 308.2.2
Obstructed High Forward Reach

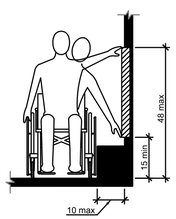

Figure 308.3.1
Unobstructed Side Reach

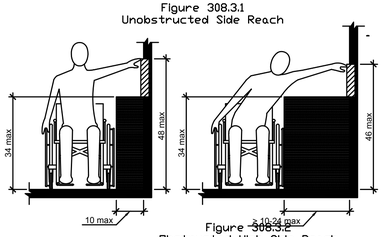

Figure 308.3.2
Obstructed High Side Reach

308.2 Forward Reach.

308.2.1 Unobstructed. Where a forward reach is unobstructed, the high forward reach shall be 48" maximum and the low forward reach shall be 15" minimum above the floor or ground.

308.2.2 Obstructed High Reach. Where a high forward reach is over an obstruction, the clear floor or ground space shall extend beneath the element for a distance not less thank the required reach depth over the obstruction. The high forward reach shall be 48" maximum where the reach depth is 20" maximum. Where the reach depth exceeds 20", the high forward reach shall be 44" maximum and the reach depth shall be 25" maximum.

308.3 Side Reach.

308.3.1 Unobstructed. Where a clear floor or ground space allows a parallel approach to an element and the side reach is unobstructed, the high side reach shall be 48" maximum and the low side reach shall be 15" minimum above the floor or ground.

Exception: Existing elements shall be permitted at 54" maximum above the floor or ground.

308.3.2 Obstructed High Reach. Where a clear floor or ground space allows a parallel approach to an object and the high side reach is over an obstruction, the height of the obstruction shall be 34" maximum and the depth of the obstruction shall 24" maximum. The high side reach shall be 48" maximum for a reach depth of 10" maximum. Where the reach depth exceeds 10", the high side reach shall be 46" maximum for a reach depth of 24" maximum.

1 / E1.24 ADA REACH REQUIREMENTS
N.T.S.

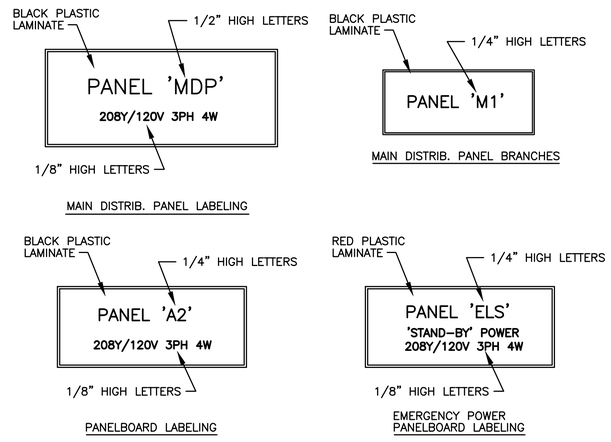

NOTE: ALL LETTERS ARE ENGRAVED WHITE

2 / E1.24 SWITCHBOARD/PANEL LABELING DETAIL
NO SCALE

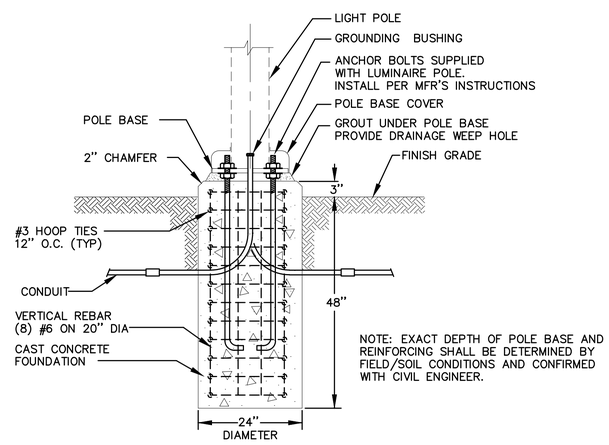

NOTE: EXACT DEPTH OF POLE BASE AND REINFORCING SHALL BE DETERMINED BY FIELD/SOIL CONDITIONS AND CONFIRMED WITH CIVIL ENGINEER.

3 / E1.24 POLE BASE MOUNTING DETAIL (AT GRADE) (TYPICAL)
NO SCALE

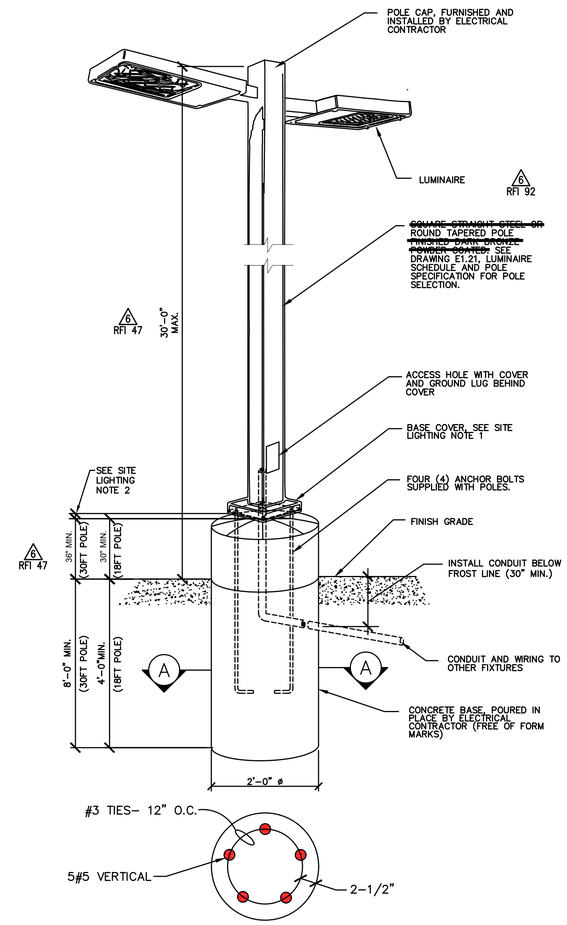

SECTION A-A
NOT TO SCALE

4 / E1.24 POLE BASE DETAIL (ABOVE GRADE) (TYPICAL)
NO SCALE

NOTES

1. PROVIDE CROWN ON TOP OF CONCRETE BASE TO COMPLETELY SHED WATER.
2. 1/2" (MIN) AIRGAP SPACE BETWEEN TOP OF CONCRETE CROWN AND BOTTOM OF POLE BASE PLATE FOR VENTILATION.
3. CONCRETE PROVIDER TO ENSURE PSI SUFFICIENT TO SUPPORT WIND RATING FOR POLE HEIGHT PER CODE REQUIREMENTS.

waterleaf architecture, interiors & planning
419 SW 11th Ave
Suite 200
Portland OR 97205
Ph 503 228.7571
Fx 503 273.8891

MFA INC.
Consulting Engineers
2007 S.E. Ash St.
Portland, OR 97214
PHN: (503) 234-0548
FAX: (503) 234-0677
WWW.MFA-ENG.COM
CONTACT: DENISE TAYLOR

FULLER STATION HOUSING

PERMIT SET DOCUMENTS

9608 SE Fuller Road
Clackamas County, Oregon, 97086

REGISTERED PROFESSIONAL ENGINEER 16,597 OREGON JULY 20, 1993 ROBERT L. CONNELL

EXPIRES 12-31-2021

PERMIT SET

PROJECT #: 1617.00

SHEET ISSUE DATE: 01/31/2020

REVISIONS:

#	DESCRIPTION	DATE
1	COUNTY REVIEW RESPONSES	10.09.2020
2	ADDENDUM #1	10.09.2020
6	ASI #01	03.05.2021
	RFI 62	07.20.2021
	RFI 68	08.10.2021
	RFI 92	09.10.2021
	RFI 42	09.30.2021
15	ASI # 10	11.05.2021
	RFI 148	11.18.2021
	RFI 150	11.18.2021
	RFI 154	11.18.2021
	RFI 155	11.18.2021
	RFI 112	12.06.2021
	RFI 110	12.06.2021

ELECTRICAL DETAILS

E1.24