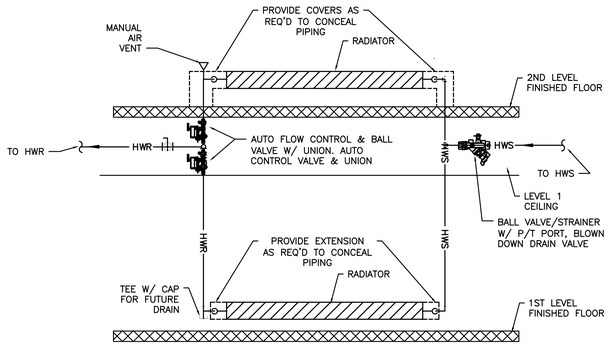

1 M6.07 RUNTAL UNIT DETAIL
SCALE: DETAIL

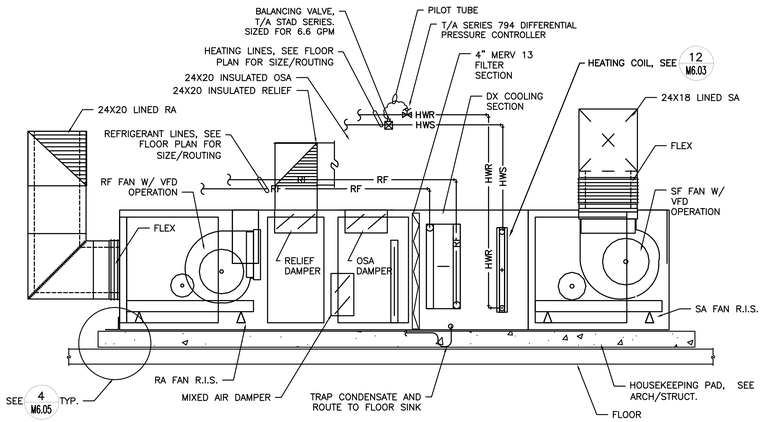

2 M6.07 AHU-1 DETAIL
SCALE: DETAIL

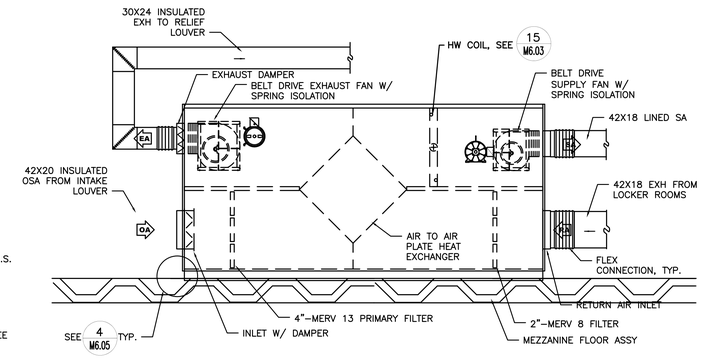

3 M6.07 AHU-2 DETAIL
SCALE: DETAIL

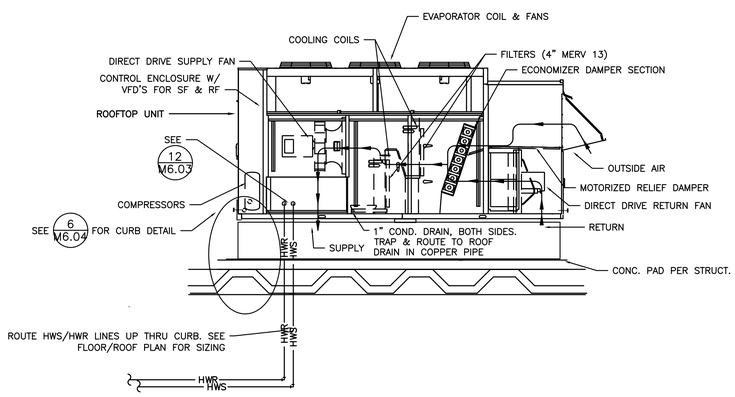

4 M6.07 ROOFTOP UNIT 3 W/ ISOLATION CURB
SCALE: DETAIL

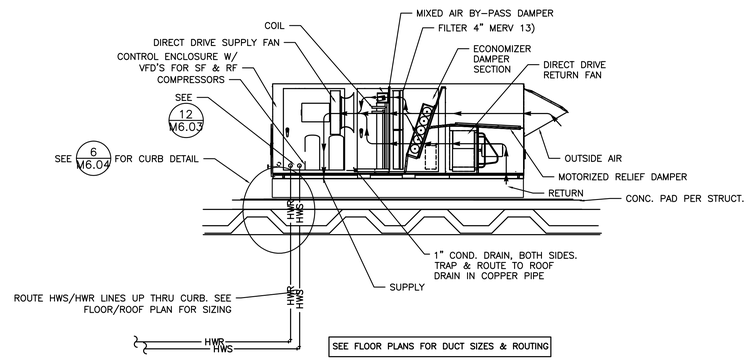

5 M6.07 ROOFTOP UNIT 4 & 5 W/ BY-PASS & ISOLATION CURB
SCALE: DETAIL

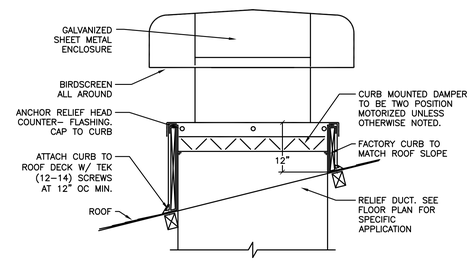

8 M6.07 RELIEF HEAD
SCALE: DETAIL

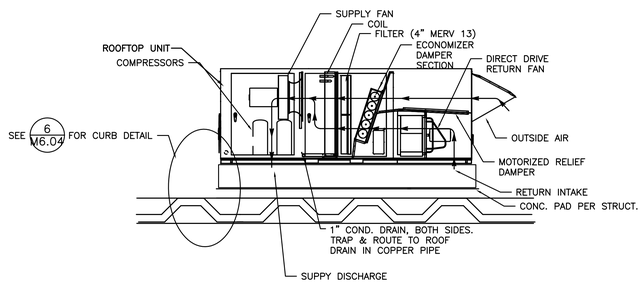

6 M6.07 ROOFTOP UNIT #6 W/ ISOLATION CURB
SCALE: DETAIL

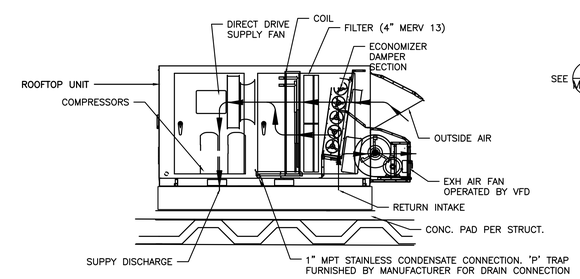

7 M6.07 ROOFTOP UNIT #8 W/ ISOLATION CURB
SCALE: DETAIL

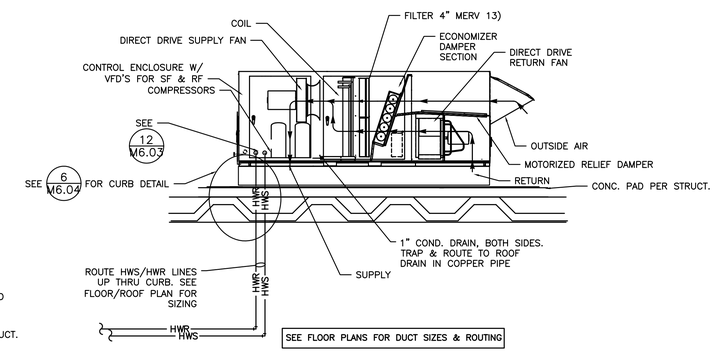

9 M6.07 ROOFTOP UNIT 7 W/ ISOLATION CURB
SCALE: DETAIL

RECORD DRAWING:
THIS DRAWING HAS BEEN UPDATED TO REFLECT CHANGES MADE DURING CONSTRUCTION BASED UPON INFORMATION FURNISHED TO THE ENGINEER BY THE INSTALLATION CONTRACTOR. NO WARRANTY EITHER EXPLICIT OR IMPLIED IS GIVEN BY MFIA, INC. AS TO THE ACCURACY AND/OR COMPLETENESS OF THIS INFORMATION.

dowa
IBI GROUP
Dull Olson Weekes - IBI Group
907 SW Stark Street, Portland OR 97205 USA
tel 503 226 6950
fax 503 273 9192
www.dowa-ibigroup.com
www.ibigroup.com

NEW PARKROSE MIDDLE SCHOOL - PACKAGE 2
Parkrose School District
Project Address: 11800 NE Shaver Street Portland, OR 97220
t: (503) 408-2900 f: (503) 408-2998

MFIA INC.
Consulting Engineers
2007 S.E. Ash St.
Portland, OR 97214
PHN: (503) 234-0548
FAX: (503) 234-0677
WWW.MFIA-ENG.COM
CONTACT: ANTONIO JOHNSON

RECORD DRAWINGS

key plan

phase	RECORD DRAWING
date	11/09/2015
revisions	
project #	11082

MECHANICAL DETAILS

M6.07

g:\dowa architects\9470_parkrose middle school\mechrecord\record drawings complete - cad and pdf\9470-m603_m607.dwg 9/20/2016 12:25 PM