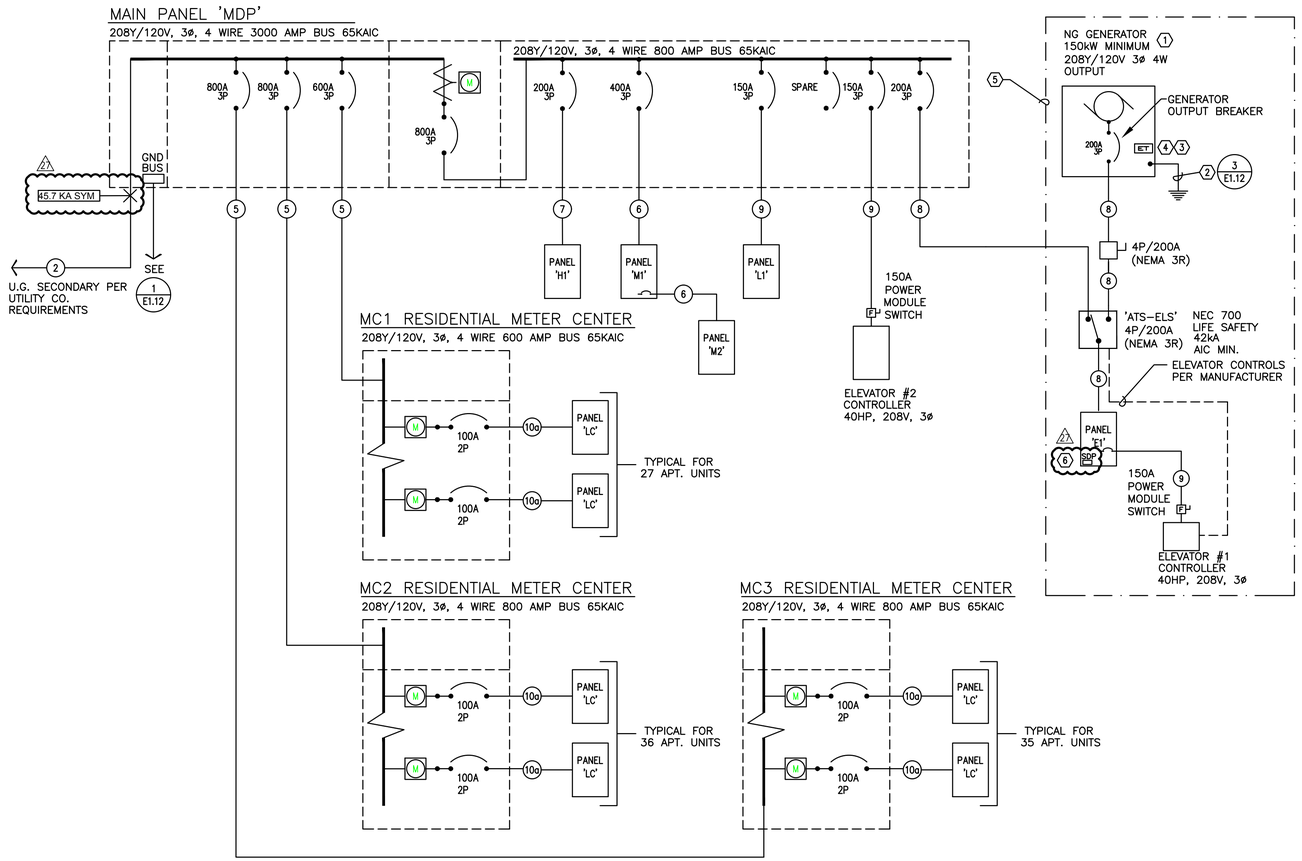

1 / E1.11 ELECTRICAL ONE-LINE DIAGRAM
208Y/120V, 3PH, 4W

Susan Emmons - North Building
"HOUSE" LOAD SUMMARY - MAIN PANEL 'MDP'
10/20/2021

LOAD:	LIGHTS	RECEPT	HEAT	KITCHEN	EQUIP	MOTORS	MISC	LARGEST MOTOR
Panel H1 (House Loads)	10,400	13,670		13,230	3,600			
Panel M1 (Equip. Loads)	0	720	15,236	0	24,000	28,807		
Panel M2 (Equip. Loads)	0	2,220	0	0	8,500	32,240		
Panel L1 (Laundry Equip)		23,300			3,500	1,226		
Panel E1 (Gen Set) (incl. Elev. #1)	625	500	0	0	3,000	42,300		42,300
Elevator #2						42,300		
SUBTOTAL	11,025	40,410	15,236	13,230	42,600	146,873	0	42,300
X-FACTOR	1.25	1 + .5	1	0.65	1	1	1	0.25
CODE LOAD:	13,781	25,205	15,236	8,600	42,600	146,873	0	10,575

CONN LOAD:	269	KVA

VOLTS:	208	3ph
TOTAL CALC:	263	KVA
CALC AMPS:	730	AMPS

Susan Emmons - North Building
"HOUSE" LOAD SUMMARY - MAIN PANEL 'MDP'
10/13/2021

LOAD:	LIGHTS	RECEPT	HEAT	KITCHEN	EQUIP	MOTORS	MISC	LARGEST MOTOR
Panel H1 (House Loads)	10,400	13,670		13,230	3,600			
Panel M1 (Equip. Loads)	0	720	15,236	0	24,000	28,807		
Panel M2 (Equip. Loads)	0	2,220	0	0	8,500	32,240		
Panel L1 (Laundry Equip)		23,300			3,500	1,226		
Panel E1 (Gen Set) (incl. Elev. #1)	625	500	0	0	3,000	42,300		42,300
Elevator #2						42,300		
SUBTOTAL	11,025	40,410	15,236	13,230	42,600	146,873	0	42,300
X-FACTOR	1.25	1 + .5	1	0.65	1	1	1	0.25
CODE LOAD:	13,781	25,205	15,236	8,600	42,600	146,873	0	10,575

CONN LOAD:	269	KVA

VOLTS:	208	3ph
TOTAL CALC:	263	KVA
CALC AMPS:	730	AMPS

Susan Emmons - North Building
LOAD SUMMARY - GENERATOR
10/13/2021

LOAD:	LIGHTS	RECEPT	HEAT	KITCHEN	EQUIP	MOTORS	MISC	LARGEST MOTOR
Panel E1 (Gen Set)	625	500	0	0	3,000	0		
Elevator #1						42,300		42,300
SUBTOTAL	625	500	0	0	3,000	42,300	0	42,300
X-FACTOR	1.25	1 + .5	1	0.65	1	1	1	0.25
CODE LOAD:	781	500	0	0	3,000	42,300	0	10,575

CONN LOAD:	46	KVA

VOLTS:	208	3ph
TOTAL CALC:	57	KVA
CALC AMPS:	159	AMPS

FEEDER SCHEDULE (COPPER)

NO.	AMPS	CONDUIT	CONDUCTOR			
1		*(5) 4"	BY UTILITY CO.	& (1)		GND
2		*(8) 6"	BY UTILITY CO.	& (1)		GND
3	1600A	*(4) 4"	ea w/ (4) #600Kcmil	& (1)	#4/0	GND
4	1200A	*(3) 4"	ea w/ (4) #600Kcmil	& (1)	#3/0	GND
5	800A	*(2) 4"	ea w/ (4) #600Kcmil	& (1)	#1/0	GND
6	400A	3 1/2"	(4) #500Kcmil	& (1)	#3	GND
7	250A	2 1/2"	(4) #250Kcmil	& (1)	#4	GND
8	200A	2"	(4) #3/0	& (1)	#6	GND
9	150A	2"	(4) #1/0	& (1)	#6	GND
10	100A	1 1/2"	(4) #1	& (1)	#8	GND
10a	100A	1 1/2"	(3) #1	& (1)	#8	GND
11	125A	1 1/2"	(3) #1	& (1)	#6	GND
12	60A	1 1/4"	(4) #4	& (1)	#10	GND

* PARALLEL FEEDER

ONE-LINE GENERAL NOTES:

A. COORDINATE ALL WORK ASSOCIATED WITH ELECTRIC SERVICE WITH LOCAL UTILITY. PROVIDE ALL CONDUIT, GROUNDING, TRANSFORMER VAULT/PAD, ETC., IN ACCORDANCE WITH SERVING UTILITY REQUIREMENTS.

B. COORDINATE METERING REQUIREMENTS WITH UTILITY.

C. FOR LOAD CENTER FEEDER LENGTHS GREATER THAN 145'-0" FROM METER CENTER, INCREASE WIRE SIZE ONE SIZE UP FOR VOLTAGE DROP.

D. PER NEC 240.87, THE ELECTRICAL CONTRACTOR SHALL PROVIDE DOCUMENTATION FOR ARC ENERGY REDUCTION DEVICE(S) FOR CIRCUIT BREAKERS 1200A OR GREATER. CONTRACTOR SHALL PROVIDE AN ENERGY-REDUCING ACTIVE FLASH MITIGATION SYSTEM OR OTHER METHOD APPROVED BY THE NEC.

E. ELEVATOR MANUFACTURER SHALL VERIFY THAT THE ELEVATOR WILL BE SUPPLIED WITH A KEY SWITCH TO OPERATE AND SELECT THE ELEVATOR CARS ON EMERGENCY POWER, AND THAT THE CARS WILL OPERATE IN SEQUENCE. THIS IS UNDERSTOOD TO MEAN THAT ONLY ONE CAR AT A TIME WILL OPERATE ON EMERGENCY POWER AND NOT SIMULTANEOUSLY, THUS PROVING THE 60KW GENERATOR TO BE ADEQUATE TO SUPPORT THE CODE REQUIREMENT FOR EMERGENCY POWER TO A MINIMUM OF ONE ELEVATOR FOR EGRESS IN THE EVENT OF A POWER OUTAGE.

F. PER THE UTILITY PROVIDER'S ELECTRICAL SERVICE REQUIREMENTS, METERING EQUIPMENT SHALL BE MANUFACTURED IN ACCORDANCE WITH EUSERC REQUIREMENTS.

⬡ ONE-LINE NOTES:

1. NATURAL GAS GENERATOR TO OPERATE ONLY ONE ELEVATOR IN THE EVENT OF A POWER OUTAGE. VERIFY ELEVATOR ELECTRICAL REQUIREMENTS AND CONSULT GENERATOR PROVIDER FOR PROPER SIZING BASED ON STANDBY POWER LOAD. REFER TO PANEL E1 FOR CIRCUITING INFORMATION.

2. PROVIDE GROUND FOR SEPARATELY DERIVED SYSTEM PER NEC.

3. PROVIDE ELECTRONIC TRIP CIRCUIT BREAKER. EXACT BREAKER TYPE, SETTINGS, ETC. TO BE VERIFIED AND AS DETERMINED BY SELECTIVE COORDINATION STUDY AS PERFORMED BY THE ELECTRICAL DISTRIBUTION EQUIPMENT MANUFACTURER.

4. COORDINATE INSTALLATION OF OUTPUT BREAKER WITH GENERATOR MANUFACTURER TO SELECTIVELY COORDINATE WITH POWER STUDY RECOMMENDATIONS.

5. THE STANDBY POWER SYSTEM SHALL MEET ALL REQUIREMENTS OF NFPA 110 AND NEC 700. CONTRACTOR SHALL BE AWARE THAT MFIA HAS ATTEMPTED TO INDICATE EQUIPMENT AND SIZES THAT WILL SELECTIVELY COORDINATE, BUT WILL NOT BE KNOWN UNTIL ELECTRICAL EQUIPMENT MANUFACTURER PERFORMS THE REQUIRED POWER STUDIES AS SPECIFIED IN 26 05 73. CHANGES MAY BE NECESSARY AFTER THE BID.

2 6. SURGE PROTECTION DEVICE (SDP) SIZED ACCORDINGLY SUPPLIED AND INSTALLED BY PANEL MANUFACTURER, AS REQUIRED BY CODE.

5. ASME A17.1, SECTION 8.27.9.1 THROUGH 5 STATES THAT IF THE EMERGENCY OR STANDBY POWER

MFIA INC. Consulting Engineers
2007 S.E. Ash St.
Portland, OR 97214
PHN: (503) 234-0548
FAX: (503) 234-0677
WWW.MFIA-ENG.COM
CONTACT: DENISE TAYLOR

REGISTERED PROFESSIONAL ENGINEER 16,597 OREGON JULY 20, 1993 ROBERT L. CONNELL
EXPIRES 12-31-2021

CARLETON HART ARCHITECTURE P.C.
830 sw 10th avenue #200 portland oregon 97205
503 243 2252
www.carletonhart.com

SUSAN EMMONS - NORTH BUILDING
680 NW 18TH AVENUE,
PORTLAND, OR

NORTHWEST HOUSING ALTERNATIVES

BID SET

PROJECT NO.
17004
03/12/2021
ELECTRICAL
ONE-LINE DIAGRAM

REVISIONS: 2

1	ADDENDUM #1	04/30/2021
2	ADDENDUM #2	05/04/2021
5	PR #2	07/07/2021
6	PR #3	08/06/2021
8	PR #4	08/18/2021
10	PR #6	10/15/2021
12	PR #7	09/17/2021
14	PR #10	10/06/2021
2	PR #11	10/21/2021

COPYRIGHT - CARLETON HART ARCHITECTURE DO NOT REPRODUCE WITHOUT PERMISSION

E1.11