SUBMITTAL COVER SHEET

CCB# 198478
1485 20th Street SE
Salem, OR 97302
Phone: 503.584.1416
Fax: 503.362.8842

Project: Myers Elementary School

TO:	Attn: Drew Cornedi CBTWO Architects 500 Liberty St Se, Suite 100 Salem, OR 97301	Sabina Frank Andy Medcalf Construction Co. 1485 20th Street SE Salem, Oregon 97302

SUBMITTAL REVIEW

THIS REVIEW IS ONLY FOR GENERAL CONFORMANCE WITH INFORMATION GIVEN AND THE DESIGN CONCEPT EXPRESSED IN THE CONTRACT DOCUMENTS. IN NO CASE IS A SUB-CONTRACTOR RELIEVED OF RESPONSIBILITY FOR ADHERENCE TO THE CONTRAT DOCUMENTS AND SATISFACDTORY CONSTRUCTION OF ALL WORK. THE INTENT OF THIS SUBMITTAL REVIEW IS TO COORDINATE ALL TRADES, THE GENERAL CONTRACTOR, AND THE ARCHITECT FOR PRODUCTS AND SERVICES ASSOCTIATED WITH THIS PROJECT

SUBMITTAL #:	27 00 00 - 1R1 Communications	**REVIEWED BY:**	**Sabina Frank**
DATE SUBMITTED	Friday, June 11, 2021	**SCHEDULE IMPACT:**	NO
COPIED TO:			

	INFORMATION SUBMITTED:
	DOCUMENTS
	PLANS / PRINTS
X	**PRODUCT INFORMATION** ***(FYI:TOC is linked to each section)***
	PRODUCT MANUAL
	SAMPLES
	SHOP DRAWINGS

	PROCESSED SUBMITTAL
	REVIEWED
	PROCEED AS NOTED
	REVISE & RESUBMIT
	SUBMIT SPECIFIED ITEM
	NOT REVIEWED
	REJECTED

ARCHITECTURAL SUBMITTAL REVIEW STAMP

	SUBMITTED BY:
	EMAIL
X	**SMARTSHEETS**
	POSTAL SERVICE
	FAXED
X	**PROCORE**

Northside Electric

ELECTRICAL SUBMITTALS – Division 27

Myers Elementary School
2160 Jewel St. NW
Salem, Oregon 97304

Andy Medcalf Construction Co.
1485 20th St. SE
Salem, Oregon 97302
503-584-1416

P.O. Box 12323 / Salem, Oregon 97309 / Phone (503) 585-4879 / Fax (503) 364-0248
www.northsideelectric.com
info@northsideelectric.com
OCCB# 80593

Table of Contents

Spec #	Section		
Manufacturer Doc #		Doc Name	Page #
27.05.26	**Grounding and Bonding for Communication Systems**		
		See Section 26.05.26	1
1			
27.05.29	**Hangers and Supports for Communication Systems**		
		See Section 26.05.29	2
2			
		270529.J01 Wide Based J-Hooks	3
3			
27.05.30	**Interior Communication Pathways**		
		270530.F01 Fire Rated Sleeves - Small	5
4			
		270530.F02 Fire Rated Sleeves -Large	7
5			
		J-Hooks	9
6			
27.05.33	**Conduits and Boxes for Communication Systems**		
		See Section 26.05.33	11
7			

Spec #	Section		
Manufacturer Doc #		Doc Name	Page #
27.11.16	**Equipment and Telecommunication Room**		
		271100.R01 Equipment Racks 2-Posts	12
8			
		271100.R02 Vertical Cable Manager	13
9			
		271100.P59 Patch Panels CAT6	14
10			
		271100.P90 Fiber Optic Drawer	16
11			
		Fiber Optic Shelf	19
12			
		271100.U01 Power Strip	20
13			
		Ladder Runway	23
14			
		271100.S01 Seismic Anchoring Bracing Products	27
15			
		Hilti Drop-In Anchors	28
16			
27.11.23	**Communications Ladder Rack**		
		Ladder Runway	33
17			
		Seismic Anchoring and Bracing Products	37
18			

Spec #	Section		
Manufacturer Doc #		Doc Name	Page #
27.13.23	**Backbone Cabling Requirements**		
		271323.F65 Single Mode Fiber Optic Cable	38
19			
		271323.C30 CAT6 Backbone Cabling	42
20			
		271323.T88 Fiber Optic Termination	46
21			
27.15.00	**Communication Horizontal Cabling**		
		271500.C96 CAT6 Horizontal Cabling Non Plenum	50
22			
		271500.C90 CAT6 Patch Panels	54
23			
		271500.J45 RJ45 Jacks 6	56
24			
		271500.W01 Low Voltage Device Plates	58
25			
		271500.T01 Velcro Cable Wraps	60
26			
27.40.00	**Audio Visual Systems**		
		Equipment List	64
27			
		2.01A Epson Pro	65
28			
		2.01B Epson Middle-Throw Zoom Lens	70
29			

Spec #	Section		
Manufacturer Doc #		Doc Name	Page #
27.40.00	**Audio Visual Systems**		
		2.01C Chief VCTUW XL	72
30			
		2.01D Chief PG3AW	73
31			
		2.02A Crown DCI2-600N	74
32			
		2.02B Biamp Tesiraforte AI	82
33			
		2.02C Extron IN1608 XI IPCP SA	84
34			
		2.02C Cisco SG110-08D	91
35			
		2.02E Extron TLP Pro 725M	102
36			
		2.02F Audio-Technica ATW-3211 831	104
37			
		2.02G Lowell LWR-1223	109
38			
		2.03A EAW VFR159i	111
39			
		2.04A Behringer QX1622USB	118
40			
		2.04A Behriinger ULM202USB	120
41			
		2.04B Denon DN-300R MKII	123
42			
		2.04C Zoom H6 Audio Recorder	126
43			

Spec #	Section		
Manufacturer Doc #		Doc Name	Page #
27.40.00	**Audio Visual Systems**		
		2.04D Audio-Technica PRO8HecH	127
44			
		2.04E Lowell LPR2122	129
45			
		2.05A Liberty E2-HDSEM-M Tech Specs	131
46			
		2.05B NM1 Mic Cables-RapcoHorizon	133
47			
		2.06A Extron-dtp-t-hwp-4K-231-d-A3	135
48			
		2.06B Extron-dtp-t-hwp-4K-231-d	137
49			
		2.06C RDL D-XLR2F	139
50			
		2.06D RDL D-CIJ3	140
51			
		Axiom bt1 Specs	142
52			
27.51.13	**Paging and Clock Systems**		
		275113.C02 CAT6 Horizontal Cabling	144
53			

Northside Electric

SEE SECTION:

26.05.26 – Grounding and Bonding for Electrical Systems

270526.B01 Telecommunications Main Grounding Busbar
270526.B02 Telecommunications Grounding Busbar
270526.B06 Bonding Jumpers
270526.C20 Compression Connectors

P.O. Box 12323 / Salem, Oregon 97309 / Phone (503) 585-4879 / Fax (503) 364-0248
www.northsideelectric.com
info@northsideelectric.com
OCCB# 80593

Northside Electric

SEE SECTION:

26.05.29 – Hangers and Supports for Electrical Systems

270529.H12 Galvanized Hardware
270529.A12 Galvanized Anchors
270529.B12 Galvanized Beam Clamps
270529.S02 Galvanized Strut Channel

P.O. Box 12323 / Salem, Oregon 97309 / Phone (503) 585-4879 / Fax (503) 364-0248
www.northsideelectric.com
info@northsideelectric.com
OCCB# 80593

CADDY® CAT HP J-Hook – CAT32HP (181062)

CADDY® CAT HP J-Hooks are the heart of the CADDY® CAT HP System. The J-Hooks have a wide base design and smooth beveled edges to provide a large bending radius for current and future high-performance data cables and fibre optics. CADDY CAT HP J-Hooks are available in a wide range of sizes to offer a solution that meets industry standards for Cat 6A and easily accommodates Cat 7, large-diameter fibre optic, innerduct and coax cable. Individual CADDY CAT HP J-Hooks can be fastened directly to the building structure or can be used to expand existing CADDY CAT HP J-Hook cable supports. The J-Hooks are designed to provide a strong and stable pathway support installation.

- Provides optimal support for high-performance data cable, up to and including Cat 5e, Cat 6, Cat 6A, Cat 7 and fibre optic
- Rounded edges on J-Hooks provide proper bend radius support for high performance data cables
- Multiple color options aid in the identification and organization of the pathway application
- Provides superior fill capacity and load rating over most other non-continuous cable support alternatives
- Tested according to DIN 4102-12
- Complies with EN 50174-2
- Meets ISO®/IEC℠ 14763-2, TIA℠ 568-C and TIA℠ 569-C
- Painted J-Hooks are low-smoke and halogen-free

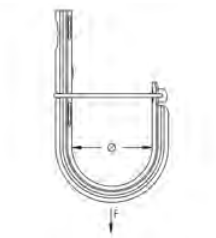

Part Number	CAT32HP
Article Number	181062
Material	Steel
Finish	Pre-galvanized
Area	3.97 in² 2,561 mm²
Cable Capacity, Cat 5e	90
Cable Capacity, Cat 6	60
Cable Capacity, Cat 6A	35
Diameter (Ø)	2" 50 mm
Static Load (F)	60 lb 270 N
Standard Packaging Quantity	50 pc
UPC	78285661761
UNSPSC	39131709

Part Number	CAT32HP
EAN-13	8711893048827
ETIM	EC000754
Approvals	cULus®

Cable	Number of Twisted Pairs	AWG	Cable Diameter	Capacity (70% fill)			
				CAT16HP	CAT32HP	CAT48HP	CAT64HP
UTP	4	24	5 mm	20	70	160	280
FTP	4	24	6 mm	15	50	110	190
SFTP	4	24	6 mm	15	50	110	190
SFTP	4	23	7 mm	10	40	85	140
F/STP	4	23	8,5 mm	7	25	60	100
SFTP	4	23	8,5 mm	7	25	60	100
SFTP	3x4	24	14 mm	2	9	20	35
UTP	25	24	13 mm	3	11	25	40

Non-continuous supports may not exceed spacing of 5' (1.5 m) per TIA^{SM} 569-C.9.7.
Cable capacity is calculated based on a 70% fill rate.

cULus is a registered certification mark of UL LLC. IEC is a registered service mark of Independent Electrical Contractors, Inc. ISO is a registered trademark of International Organization for Standardization. TIA is a registered service mark of the Telecommunications Industry Association.

WARNING
ERICO products shall be installed and used only as indicated in ERICO's product instruction sheets and training materials. Instruction sheets are available at www.erico.com and from your ERICO customer service representative. Improper installation, misuse, misapplication or other failure to completely follow ERICO's instructions and warnings may cause product malfunction, property damage, serious bodily injury and death.

Copyright © 2013 ERICO International Corporation. All rights reserved.
CADDY, CADWELD, CRITEC, ERICO, ERIFLEX, ERITECH, and LENTON are registered trademarks of ERICO International Corporation.

EZ PATH® SERIES 22 FIRE RATED PATHWAY

As specified

APPLICATIONS

EZ Path® Series 22 Fire Rated Pathway is designed for easy installation in walls. Tested and approved cable capacities range from 0 to 100% visual fill. EZ Path® Series 22 Fire Rated Pathway when installed with provided wall plates is designed for new cable installations. In these installations, the device does not require mechanical attachment to either the wall or the wall framing and may be installed after the wallboard has been installed. EZ Path® Series 22's split body design also allows the device to be easily disassembled and installed around previously installed cables in existing construction.

EZ Path® Series 22 Fire Rated Pathway provides exceptional cable capacity. A single unit installed in a wall has an equal cable carrying capacity of a 2" (50 mm) diam sleeve utilizing typical putty firestop systems (35% cable loading).

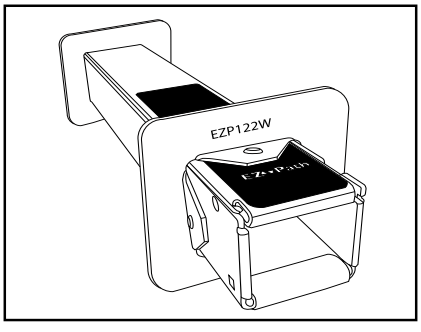

PRODUCT DESCRIPTION

The EZ Path® Series 22 Fire Rated Pathway is a pathway device designed to allow cables to penetrate fire-rated walls without the need for firestopping. This device features a built-in fire sealing system that automatically adjusts to the amount of cables installed. Once installed in a fire barrier, cables can be easily added or removed at any time without the need to remove or reinstall firestopping materials.

The EZ Path® Series 22 Fire Rated Pathway consists of an enclosed heavy gauge galvanized steel pathway lined with intumescent material engineered for rapid expansion when exposed to fire or high temperatures, quickly sealing the pathway and preventing the passage of flames and smoke.

EZ Path® Series 22 Fire Rated Pathway is painted safety orange for easy identification. Its compact square profile allows a maximum number of cables to be installed in a relatively small area. The pathway measures approximately 1-1/2" x 1-1/2" (37mm) and is 10-1/2" (267 mm) long.

FEATURES

- **Easy to install**
- **No firestopping required**
- **Firestopped at all stages of use**
- **UL Tested - Low Leakage!**
- **UL Classified for the complete range of its capacity**
- **Match the capacity of a 2" (50 mm) conduit**
- **Acoustically Tested**

UL CERTIFIED SAFETY US:CA R14579

FIRESTOP DEVICE CERTIFIED FOR USE IN THROUGH-PENETRATION FIRESTOP SYSTEMS SEE UL ONLINE CERTIFICATIONS DIRECTORY.

FM APPROVED

PERFORMANCE

EZ Path® Series 22 Fire Rated Pathway is UL Tested and Certified in accordance with ASTM E814 (UL1479) and CAN/ULC S115. Systems are available for common wall construction with ratings up to and including 2 hours.

SPECIFICATIONS

All data, video, and communications cable bundles shall utilize an enclosed fire-rated pathway device wherever said cables penetrate rated walls. The fire-rated pathway shall contain a built-in fire sealing system sufficient to maintain the hourly fire rating of the barrier being penetrated. The self-contained sealing system shall automatically adjust to the installed cable loading and shall permit cables to be installed, removed, or retrofitted without the need to remove or reinstall firestop materials. The pathway shall be UL Certified and tested to the requirements of ASTM E814 (UL1479) and CAN/ULC S115.

SPECIFIED DIVISIONS

DIV.	7	07 84 00	Through-Penetration Firestopping
DIV.	26	26 00 00	Electrical
DIV.	27	27 00 00	Communications

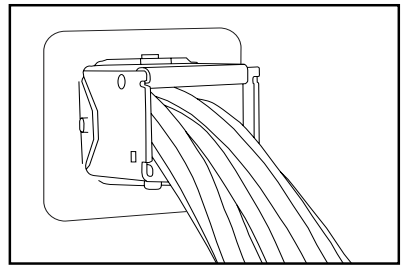

MAINTENANCE

No maintenance of the pathway is normally required.

INSTALLATION INSTRUCTIONS

UL Classified Systems presently cover installations in framed gypsum board walls as well as masonry walls with ratings of up to 2 hours.

Installation in walls for new cabling installations utilizes one device with provided wall plates and gaskets. Wall plates are secured to pathway using an Allen wrench provided by the manufacturer with each kit. Installation is easily and quickly accomplished using the following steps:

1. Make an opening using a 2" (50 mm) hole saw or measure and cut a nom 1-3/4" (44 mm) square opening through wall.
2. Pre position and fasten wall plate to one side of pathway (see Fig 1) roughly centering pathway within barrier.
3. Slide provided gasket over end of pathway and insert through opening in the wall (See Fig. 2).
4. Working from the opposite side of the wall, install remaining gasket and wall plate to complete the installation.

Wall installation for existing cables

For normal sized openings, the opening is squared off and a single EZD22 pathway is installed in the wall. The periphery is sealed using SpecSeal Firestop Sealant (See Table B: ORDERING INFORMATION).

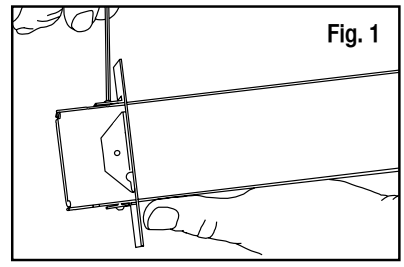

Fig. 1

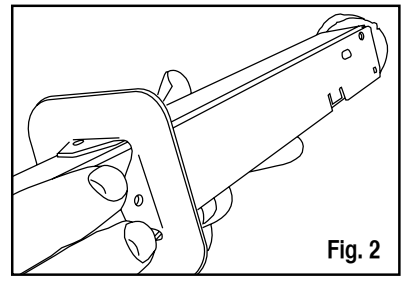

Fig. 2

TECHNICAL SERVICE

Technical information including Product Data Sheets, Installation Instructions, applicable UL Classified Systems, Certificates of Conformance, and suggested specifications are available at the company's web site (www.stifirestop.com). For all other information, contact the manufacturer directly by dialing (800) 992-1180.

PRECAUTIONARY INFORMATION

The use of this device is subject to local, regional and national codes. Consult the local Building Code Official or Authority Having Jurisdiction regarding any regional or local requirements that might influence the selection or use of this product.

AVAILABILITY

See Table B - Ordering Information. EZ Path® Fire-Rated Pathway Products are available from designated authorized STI distributors. Consult the factory or visit the web site (www.stifirestop.com) for the names and locations of the nearest sales representatives or distributors.

TABLE A: Technical Data

Shell Composition	0.059" (1.5 mm) Gal. Steel
Cable Loading Area	1-1/4 sq. in. (nom.) (8.06 cm^2)
Allowable Cable Fill	100% Visual
Fire Resistance Ratings	1 and 2 Hour
Expansion Begins	350° F (177°C)
Volume Expansion	30X
Sample Cable Volume Average od of 0.236" (Cat 6)	15 (nom.)
In-Service Temp.	-10°F (-23°C) - 120°F (49°C)
Storage Temp.	Less than 120°F (49°C)
Shelf Life	No Limit

TABLE B: ORDERING INFORMATION

CAT. NO.	DESCRIPTION	CASE QTY.
EZD22	Series 22 device, full kit includes wall plates & labels	6

IMPORTANT NOTICE: All statements, technical information, and recommendations contained herein are based upon testing believed to be reliable, but the accuracy and completeness thereof is not guaranteed.

LIMITED WARRANTY: STI warrants that its products will be free of defects for one year from the date of purchase. In the event a product does not conform to this warranty, the sole and exclusive remedy is, at STI's option, replacement of the product or refund of the purchase price. The warranty provided herein shall be void and of no effect in the event that the product is not installed in accordance with STI's published instructions, listed systems and applicable building and safety codes. THIS WARRANTY IS IN LIEU OF ALL OTHER REPRESENTATIONS AND EXPRESSED OR IMPLIED WARRANTIES (including the implied warranties of merchantability or fitness for a particular use) AND UNDER NO CIRCUMSTANCES SHALL STI BE LIABLE FOR ANY DIRECT, INDIRECT, SPECIAL, INCIDENTAL OR CONSEQUENTIAL DAMAGES OR LOSSES, INCLUDING, WITHOUT LIMITATION, ANY LOSS OF REVENUE, PROFIT OR USE. Prior to use, the user shall determine the suitability of the product for its intended use, and the user assumes all risks and liability for subsequent use. No person other than an officer of STI is authorized to bind STI to any other warranty for any product for which this warranty is issued.

MADE IN THE USA – COPYRIGHT © 2017 SPECIFIED TECHNOLOGIES, INC.

Specified Technologies Inc.
STI
THE FIRESTOP AUTHORITY

EZ-PATH® SERIES 33 FIRE RATED PATHWAY

APPLICATIONS

EZ-Path® Series 33 Fire Rated Pathway is designed for easy installation in floors and walls. Tested and approved cable capacities range from 0 to 100% visual fill. EZ-Path® Series 33 Fire Rated Pathway when installed with available wall plates is designed for new cable installations. In these installations, the device does not require mechanical attachment to either the wall or the wall framing and may be installed after the wallboard has been installed. EZ-Path's® split body design also allows the device to be easily disassembled and installed around previously installed cables in existing construction.

EZ-Path® Series 33 Fire Rated Pathway provides exceptional cable capacity. A single unit installed in a wall exceeds the cable carrying capacity of a 4" (102 mm) sleeve utilizing typical putty firestop systems (35% cable loading). Multiple ganged devices utilizing available duplex, or triplex wall plates provide additional capacity or segregation of cables by use, type, installer or vendor as desired.

TECHNICAL DATA	
Shell Composition	0.059" Gal. Steel (1.5 mm)
Cable Loading Area	6 sq. in. (nom.) 39 cm^2
Allowable Cable Fill	100% Visual
Fire Resistance Ratings	1,2 3, and 4 Hour
Expansion Begins	350^0 F (177^{0}C)
Volume Expansion	15X
Sample Cable Volume Cat 6 (0.236" OD)	88 (nom.)
In-Service Temp.	-10^{0}F (-23^{0}C) - 120^{0}F (49^{0}C)
Storage Temp.	Less than 120^{0}F (49^{0}C)
Shelf Life	No Limit

PRODUCT DESCRIPTION

The EZ-Path® Fire Rated Pathway is a pathway device designed to allow cables to penetrate fire-rated walls and floors without the need for firestopping. This device features a built-in fire and smoke sealing system that automatically adjusts to the amount of cables installed. Once installed in a fire barrier, cables can be easily added or removed at any time without the need to remove or reinstall firestopping materials.

EZ-Path® Series 33 Fire Rated Pathway consists of an enclosed heavy gauge galvanized steel pathway lined with intumescent material engineered for rapid expansion when exposed to fire or high temperatures, quickly sealing the pathway and preventing the passage of flames and smoke.

EZ-Path® Series 33 Fire Rated Pathway is painted safety orange for easy identification. Its compact square profile allows a maximum number of cables to be installed in a relatively small area. The pathway measures approximately 3" x 3" and is 10.5" (76 x 76 x 267 mm) long.

FEATURES & BENEFITS

- Easy to install.
- No firestopping required.
- Acoustically Tested
- Firestopped at all stages of use.
- UL Tested - Low Leakage!
- UL Classified for the complete range of its capacity.
- Pathways can be ganged for additional capacity.
- Permits cable segregation by use, type, vendor.
- Match the capacity of a 4" (102 mm) conduit.

PERFORMANCE

EZ-Path® is UL Tested and Classified in accordance with ASTM E814 (UL1479) & CAN/ULC-S115. Systems are available for common floor and wall constructions with ratings up to and including 4 hours.

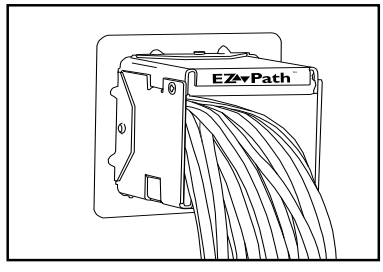

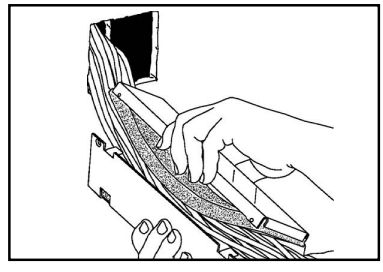

SPECIFICATIONS

All data, video, and communications cable bundles shall utilize an enclosed fire-rated pathway device wherever said cables penetrate rated walls. The fire-rated pathway shall contain a built-in fire sealing system sufficient to maintain the hourly fire rating of the barrier being penetrated. The self-contained sealing system shall automatically adjust to the installed cable loading and shall permit cables to be installed, removed, or retrofitted without the need to remove or reinstall firestop materials. The pathway shall be UL Classified and/or FM Systems Approved and tested to the requirements of ASTM E814 (UL1479) & CAN/ULC-S115.

SPECIFIED DIVISIONS

DIV. 7	07 84 00	Through-Penetration Firestopping
DIV. 26	26 00 00	Electrical
DIV. 27	27 00 00	Communications

FIRESTOP DEVICE CERTIFIED FOR USE IN THROUGH-PENETRATION FIRESTOP SYSTEMS SEE UL ONLINE CERTIFICATIONS DIRECTORY.

CABLE INSTALLATION

Cables may easily be added or removed at any time without removing or reinstalling the fire seal. Cables may be added individually or in bundles. Wrapping ends with a low-friction tape facilitates cable insertion. A self-adjusting cable throat automatically adjusts to accommodate the cable bundle as it passes through the pathway.

MAINTENANCE

No maintenance of the pathway is normally required.

TECHNICAL SERVICE

Technical information including Product Data Sheets, Installation Instructions, applicable UL Classified Systems, Certificates of Conformance, and suggested specifications are available at the company's web site (www.stifirestop.com). For all other information, contact the manufacturer directly by dialing (800) 992-1180.

PRECAUTIONARY INFORMATION

The use of this device is subject to local, regional and national codes. Consult the local Building Code Official or Authority Having Jurisdiction regarding any regional or local requirements that might influence the selection or use of this product.

AVAILABILITY

See Table C - Required Components and Table D - Ordering Information. EZ-Path Fire-Rated Pathway Products are available from designated authorized STI distributors. Consult the factory or visit the web site (www.stifirestop.com) for the names and locations of the nearest sales representatives or distributors.

* For new cabling installations. Retrofitting existing cable installations may require firestop sealant. See INSTALLATION.

TABLE D: ORDERING INFORMATION

CAT. NO.	DESCRIPTION
EZDP33FWS	Single Device, full kit includes wall plates & labels.
EZDP33WR	Single Device, Retro-fit kit includes wall plates & labels.
EZD33FWS	Fire Rated Pathway Device.
EZP133W	One pair (2) single mounting plates with wall labels.
EZP233W	One pair (2) double mounting plates with wall labels.
EZP333W	One pair (2) triple mounting plates with wall labels.
EZP433W	One pair (2) four gang mounting plates with wall labels.
EZP733W	One pair (2) seven gang mounting plates with wall labels.
RCM33	One Pair (2) radius control modules.
EZP133K	One single Kick-In plate.
EZP133R	One pair (2) retro-fit plates.
EZP133PC	One pair (2) positioning clamps.

IMPORTANT NOTICE: All statements, technical information, and recommendations contained herein are based upon testing believed to be reliable, but the accuracy and completeness thereof is not guaranteed.

LIMITED WARRANTY: STI warrants that its products will be free of defects for one year from the date of purchase. In the event a product does not conform to this warranty, the sole and exclusive remedy is, at STI's option, replacement of the product or refund of the purchase price. The warranty provided herein shall be void and of no effect in the event that the product is not installed in accordance with STI's published instructions, listed systems and applicable building and safety codes. THIS WARRANTY IS IN LIEU OF ALL OTHER REPRESENTATIONS AND EXPRESSED OR IMPLIED WARRANTIES (including the implied warranties of merchantability or fitness for a particular use) AND UNDER NO CIRCUMSTANCES SHALL STI BE LIABLE FOR ANY DIRECT, INDIRECT, SPECIAL, INCIDENTAL OR CONSEQUENTIAL DAMAGES OR LOSSES, INCLUDING, WITHOUT LIMITATION, ANY LOSS OF REVENUE, PROFIT OR USE. Prior to use, the user shall determine the suitability of the product for its intended use, and the user assumes all risks and liability for subsequent use. No person other than an officer of STI is authorized to bind STI to any other warranty for any product for which this warranty is issued.

MADE IN THE USA – COPYRIGHT © 2017
SPECIFIED TECHNOLOGIES, INC.

Specified Technologies Inc.
STI®
THE FIRESTOP AUTHORITY

An ISO9001:2008 Company

Specified Technologies Inc. • Somerville NJ 08876 USA • Phone: 800.992.1180 • Fax: 908.526.9623

CADDY® CABLECAT
Wide Base Cable Support

PATENT # 5,740,994

Angle Brackets for Greater Field Assembly Options
Up to 300 Lb. Loads

Features

- Provides proper support of Category 5, Category 6, fiber optic and innerduct.
- Many sizes and designs available to attach to a variety of structures.
- Cost effective alternative to expensive cable tray.
- Galvanized finish on J-hooks provide smoother cable pull and greater corrosion resistance.
- Complies with UL®, cUL®, NEC® and EIA/TIA℠ requirements for structured cabling systems.

Fig. 1

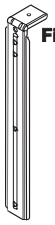
Fig. 2

Fig. 3

Fig. 4

Fig. 5

Works On New Taller T-Grid!

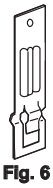
Fig. 6

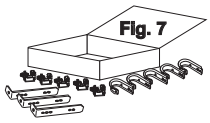
Fig. 7

Applications

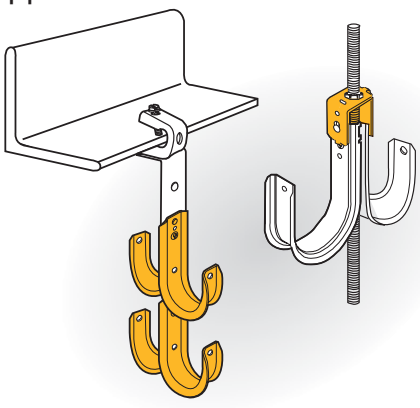

PDF created with pdfFactory Pro trial version www.pdffactory.com

CADDY® CABLECAT
Wide Base Cable Support

PART NUMBER	FIG. NO.	DESCRIPTION	QTY. PER BOX
CAT12*	1	Up to 16 4-pair UTP CAT 5e or 2-strand fiber optic cable, or 10 CAT 6 - 3/4" dia. loop	50
CAT21†	1	Up to 50 4-pair UTP CAT 5e or 2-strand fiber optic cable or innerduct, or 32 CAT 6 - 1 5/16" dia. loop	80
CAT32†	1	Up to 80 4-pair UTP CAT 5e or 2-strand fiber optic cable or innerduct, or 50 CAT 6 - 2" dia. loop	60
CAT64	1	Up to 300 4-pair UTP CAT 5e or 2-strand fiber optic cable, or 185 CAT 6 - 4" dia. loop	25
CATHBA	2	Extended J-Hook angle bracket - 1/4" mounting hole	40
CATHBA3	2	Extended J-Hook angle bracket - 3/16" mounting hole	40
CATHBA6	2	Extended J-Hook angle bracket - 3/8" mounting hole	40
CATHBA8	2	Extended J-Hook angle bracket - 1/2" mounting hole	40
S3575BP100	3	1/4 - 20 x 3/8" round head screw	100
S3575DP100	3	1/4 - 20 x 3/4" round head screw	100
AFAB3	4	3/16" mounting hole (includes 1/4 - 20 x 3/8" round head screw)	50
AFAB4	4	1/4" mounting hole (includes 1/4 - 20 x 3/8" round head screw)	50
AFAB6	4	3/8" mounting hole (includes 1/4 - 20 x 3/8" round head screw)	50
CATMTP	5	Mille-Tie™ for air handling spaces (plenum)	100
CATTS*	6	Support from tee grid	100
Kits For Beam Applications (Field Assemblies)			
CAT KITA	7	CAT32 – 20 pieces / CATHBA Hanger–5 pieces BC200 Beam Clamps – 5 pieces	1 Kit
CAT KITB	7	CAT21 – 10 pieces / CAT32 – 10 pieces CATHBA Hanger – 5 pieces BC200 Beam Clamps – 5 pieces (screws included)	1 Kit
CAT KITC	7	CAT21 – 20 pieces / CATHBA Hanger–5 pieces BC200 Beam Clamps – 5 pieces (screws included)	1 Kit

†Available in stainless steel

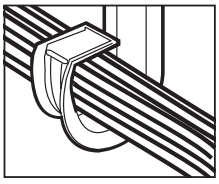

*CAT12 J-Hooks and CAT12 assemblies include bend back tab.

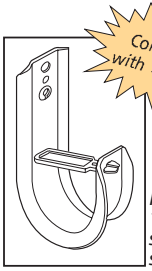

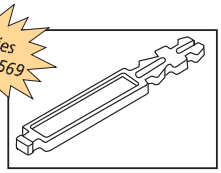

Retainers now included with 1 5/16", 2" and 4" J-Hook sizes, suitable for air handling spaces (plenum).

PDF created with pdfFactory Pro trial version www.pdffactory.com

Northside Electric

SEE SECTION:

26.05.33 – Conduits and Boxes for Electrical Systems

270533.C01 EMT Conduit
270533.B01 Galvanized Sheet Metal Boxes

P.O. Box 12323 / Salem, Oregon 97309 / Phone (503) 585-4879 / Fax (503) 364-0248
www.northsideelectric.com
info@northsideelectric.com
OCCB# 80593

Product Cut Sheet

7', 8' & 9' STANDARD RACKS

The Standard Rack is designed for value conscious, high volume customers, who require the quality and service that sets CPI racks apart from the competition. The Standard Rack is a UL Listed communication circuit accessory designed specifically for use in telecommunications equipment installations where codes require UL Listed equipment racks. For a greater breadth of features, we recommend CPI Universal Racks.

- High strength aluminum construction
- Shipped with (2) top angles, (2) base angles, (2) 3"D (80 mm) equipment channels and assembly hardware
- Top angles allow J-bolt attachment without interfering with the top rack-mount unit space
- EIA-310-D Standard Universal 5/8"-5/8"-1/2" (15.9 mm-15.9 mm-12.7 mm) alternating hole pattern offers greater mounting flexibility and is fully compatible with conventional wide 1 1/4"-1/2" (31.8 mm-12.7 mm) alternating hole patterns
- Six web channel holes per side enable attachment of vertical cable managers or for multiple racks to be mounted together side by side
- High strength roll-formed threaded equipment mounting holes on the front and rear of the rack channel
- Rack-mount units (U) are marked and numbered to simplify equipment installation
- Includes 50 pilot point #12-24 mounting screws with combination Phillips/Straight heads to reduce cross-threading and installation time
- Integrated masked grounding studs on the inside of the rack channel for quick attachment to the Telecommunications Grounding System
- Computer beige, gray, clear grained, black and glacier white finish provides attractive appearance
- Ships unassembled, individually packaged, with assembly hardware and installation instructions. Bulk packaging is also available
- Redesigned shipping container saves space and freight costs
- Choose from three heights
- Weight capacity of 1000 lb (453.6 kg) — weight must be evenly distributed and rack must be properly secured to the floor
- UL and cUL Listed

c UL us LISTED

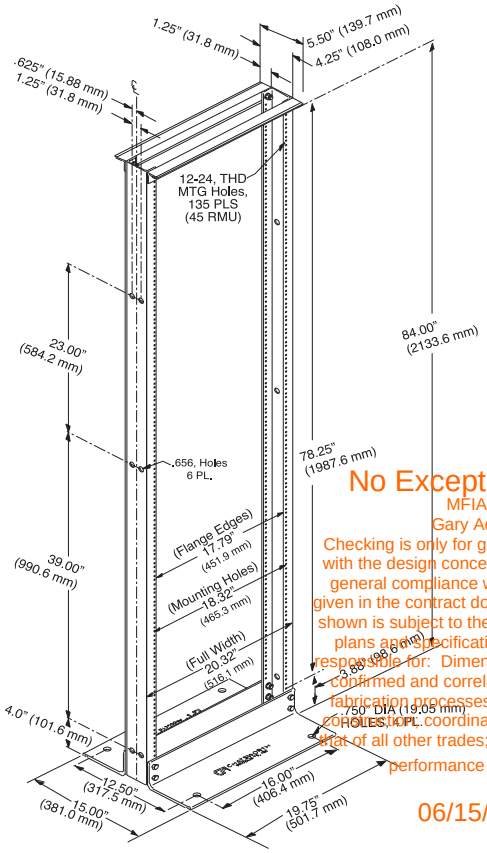

7' (2.1 m) Rack Shown

No Exception Taken
MFIA, Inc
Gary Adovnik
Checking is only for general conformance with the design concept of the project and general compliance with the information given in the contract documents. Any action shown is subject to the requirements of the plans and specifications. Contractor is responsible for: Dimensions, which shall be confirmed and correlated at the job site; fabrication processes and techniques of construction; coordination of his work with that of all other trades; and the satisfactory performance of his work.
06/15/2021

Part Number	Description	Shipping Weight
55053-X03	19"EIA x 7'H (2.1 m) Standard Rack, 45U	32 lb (14.1 kg)
55053-X15	19"EIA x 8'H (2.4 m) Standard Rack, 52U	37 lb (16.8 kg)
55053-X08	19"EIA x 9'H (2.7 m) Standard Rack, 58U	40 lb (18.1 kg)

Note: X=color: 1=Gray, 2=Computer Beige, 5=Clear, 7=Black, E=Glacier White.

Rack-mount units (U) simplify equipment installation

Ground Studs located directly on rack channel, speeds installation

CHATSWORTH PRODUCTS

©2013 Chatsworth Products, Inc. All rights reserved. CPI, CPI Passive Cooling, GlobalFrame, MegaFrame, Saf-T-Grip, Seismic Frame, SlimFrame, TeraFrame, Cube-iT Plus, Evolution, OnTrac, Velocity and QuadraRack are federally registered trademarks of Chatsworth Products. eConnect and Simply Efficient are trademarks of Chatsworth Products. All other trademarks belong to their respective companies. Rev.4 06/13

Product Cut Sheet

CCS COMBINATION CABLING SECTION

The CCS Combination Cabling Section offers the best of CPI's cabling sections, but with added design features. This cabling section is double-sided with the front side featuring plastic cable guides (like those used on the MCS Master Cabling Section,) while the back retains the classic VCS Vertical Cabling Section design.

- 1U cable guides on the front designed for fanning and managing patch cords
- Open cabling section on the rear provides easy access and routes cable bundles feeding into the back of patch panels
- Edge-protected pass through ports make it easy to route cable from front to back; vertical slots along the center separator secure cable bundles neatly with optional Saf-T-Grip® Cable Management Straps
- Plastic Cable Guides meet UL 94V-0 Flame Resistant standards
- Innovative SwitchGate Door/Cover (front) is easily opened from the right or left and can be removed so that cable does not have to thread through guides
- Attach to Standard Racks, Universal Racks, QuadraRack or Adjustable QuadraRack frames
- Mounting hardware and doors are included

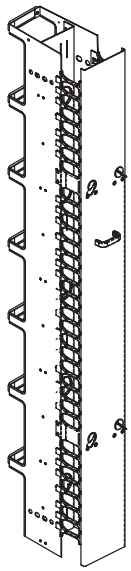

Revise and Resubmit
Gary Adovnik, MFIA Inc.
Does not match specification
or district standards
06/15/2021

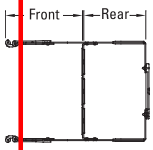

Usable Depth
For 3"D (80 mm) Rack Version:
Front=5.90" (149.9 mm); Rear=5.35" (135.9 mm)
For 6"D (150 mm) Rack Version:
Front=7.40" (188.0 mm); Rear=6.85" (174.0 mm)

Part Number 3"D (80 mm) Racks	Height ft (m)	Depth in (mm)	Shipping Weight lb (kg)
3.65"W (92.7 mm)			
30161-X01	6 (1.8)	12.24 (311)	25 (11.3)
30161-X03	7 (2.1)	12.24 (311)	29 (13.2)
30161-X05	7.6 (2.3)	12.24 (311)	31 (14.1)
30161-X15	8 (2.4)	12.24 (311)	33 (15.0)
30161-X08	9 (2.7)	12.24 (311)	38 (17.2)
6"W (150 mm)			
30162-X01	6 (1.8)	12.24 (311)	29 (13.2)
30162-X03	7 (2.1)	12.24 (311)	34 (15.4)
30162-X05	7.6 (2.3)	12.24 (311)	37 (16.8)
30162-X15	8 (2.4)	12.24 (311)	39 (17.7)
30162-X08	9 (2.7)	12.24 (311)	44 (20.0)
10"W (250 mm)			
30163-X01	6 (1.8)	12.24 (311)	40 (18.1)
30163-X03	7 (2.1)	12.24 (311)	46 (20.9)
30163-X05	7.6 (2.3)	12.24 (311)	50 (22.7)
30163-X15	8 (2.4)	12.24 (311)	53 (24.0)
30163-X08	9 (2.7)	12.24 (311)	59 (26.8)

Part Number 6"D (150 mm) Racks	Height ft (m)	Depth in (mm)	Shipping Weight lb (kg)
3.65"W (92.7 mm)			
30164-X01	6 (1.8)	14.61 (371)	28 (12.7)
30164-X03	7 (2.1)	14.61 (371)	33 (15.0)
30164-X05	7.6 (2.3)	14.61 (371)	36 (16.3)
30164-X15	8 (2.4)	14.61 (371)	38 (17.2)
30164-X08	9 (2.7)	14.61 (371)	43 (19.5)
6"W (150 mm)			
30165-X01	6 (1.8)	14.61 (371)	33 (15.0)
30165-X03	7 (2.1)	14.61 (371)	38 (17.2)
30165-X05	7.6 (2.3)	14.61 (371)	41 (18.6)
30165-X15	8 (2.4)	14.61 (371)	44 (20.0)
30165-X08	9 (2.7)	14.61 (371)	49 (22.2)
10"W (250 mm)			
30166-X01	6 (1.8)	14.61 (371)	42 (19.1)
30166-X03	7 (2.1)	14.61 (371)	49 (22.2)
30166-X05	7.6 (2.3)	14.61 (371)	53 (24.0)
30166-X15	8 (2.4)	14.61 (371)	56 (25.4)
30166-X08	9 (2.7)	14.61 (371)	63 (28.6)

X=color; 7=Black, E=Glacier White.

CHATSWORTH PRODUCTS

©2013 Chatsworth Products, Inc. All rights reserved. CPI, CPI Passive Cooling, GlobalFrame, MegaFrame, Saf-T-Grip, Seismic Frame, SlimFrame, TeraFrame, Cube-iT Plus, Evolution, OnTrac, Velocity and QuadraRack are federally registered trademarks of Chatsworth Products. eConnect and Simply Efficient are trademarks of Chatsworth Products. All other trademarks belong to their respective companies. Rev.3 07/13

Cat 6 Flat 110-Style Patch Panels

APPLICATION

Leviton Cat 6 Flat 110-Style Patch Panels are designed for use on 19-inch standard racks and cabinets. Patch panels include patented Retention Force Technology which promotes consistent performance over the life of the system. Installer-friendly design allows for quick installation due to standard 110 terminations on the rear of the panels which follows the normal installation color sequence (blue, orange, green, brown) from left to right. The Cat 6 system is designed for use in high-megabit applications such as Gigabit Ethernet.

SPECIFICATION

Patch panels shall meet or exceed the requirements for channel- and component-level performance as described in ANSI/TIA-568-C.2 Category 6 standards, as well as the Class E requirements described in ISO/IEC 11801. Panels shall feature both T568A and T568B wiring configurations, white IDC 110-punchdown modules, mounting standoffs for cable management bars, and color-coded front window labeling. Panels shall have universal T568A and T568B wiring card for terminations. Panels shall be made of 14-gauge steel, and shall have a black painted finish with white silk-screening. The plastic elements shall be fire retardant with a UL flammability rating of 94V-0. Panels shall be offered in 12-, 24, 48-, and 96-port configurations as well as an 89D 12-port configuration. Patch panels shall be configured with six port modules. The 110 termination on the rear of the panels shall follow normal installation color sequence (blue, orange, green, brown) from left to right.

COUNTRY OF ORIGIN

USA

FEATURES

- Patented Retention Force Technology protects tines from damage and increases system longevity
- Craft-friendly installation
- Universal T568A and T568B wiring cards for 110-style IDC terminations
- Color-coded front labeling for easy port identification (ANSI/TIA-606-B compliant)
- Terminates 26-22 gauge solid conductors
- Centralized labeling (available on 48-Port) promotes greater visibility of labels when patch cords are routed into horizontal cable management above and below the patch panel
- Capable of multiple re-terminations
- Panel available with patented magnifying lens label holder for easy reading

DESIGN CONSIDERATIONS

- Mounts on 19-inch equipment racks
- Panel offered in 12-, 24-, 48-, 96-port configurations and 12-port U89 Block for wall-mount applications
- Connector modules are in groups of six
- Includes rear cable management bars
- Use star washers for grounding in rack-mount installations

STANDARDS COMPLIANCE

- ANSI/TIA-568-C.2
- ISO/IEC 11801
- ANSI/TIA-1096-A (formerly FCC Part 68)
- cULus Listed
- IEEE 802.3at (Type 1) Power over Ethernet (PoE) applications up to 15.4 watts
- IEEE 802.3at (Type 2) Power over Ethernet (PoE+) applications up to 30 watts
- IEEE 802.3bt/D1.7 (Type 3) Power over Ethernet (PoE+) applications up to 60 watts
- IEEE 802.3bt/D1.7 (Type 4) Power over Ethernet (PoE+) applications up to 100 watts
- Cisco Universal Power Over Ethernet (UPOE) applications up to 60 watts
- Power over HDBaseT™ (POH) applications up to 100 watts

PHYSICAL SPECIFICATIONS

Dimensions:	See page two
Capacity:	12, 24, 48, 96-port, U-89 Universal 12-port block
Materials:	14-gauge steel, painted black; PCB and plastic components are rated per UL 94V-0

Leviton Network Solutions
2222 - 222nd St. SE
Bothell, WA 98021-4416

tel 1-800-824-3005
tel +1-425-486-2222
appeng@leviton.com
www.leviton.com

Asia / Pacific
T +1.631.812.6228
E infoasean@leviton.com

Canada
T +1.514.954.1840
E pcservice@leviton.com

Caribbean
T +1.954.593.1896
E infocaribbean@leviton.com

China
T +852.2774.9876
E infochina@leviton.com

Colombia
T +57.1.743.6045
E infocolombia@leviton.com

Europe
T +33.6.8869.1380
E infoeurope@leviton.com

India / SAARC
T + 971.4.886.4722
E infoindia@leviton.com

Mexico
T +52.55.5082.1040
E lsamarketing@leviton.com

Middle East & Africa
T +971.4.886.4722
E lmeinfo@leviton.com

South Korea
T +82.2.3273.9963
E infokorea@leviton.com

Copyright © 2016 Leviton Manufacturing Co., Inc. All rights reserved. Subject to change without notice.

Revised April 2016

WARRANTY INFORMATION

For a copy of Leviton product warranties, visit www.leviton.com/warranty.

ELECTRONIC FILES

For CAD files, typical specs, or technical drawings (.DXF, .DWG), visit www.leviton.com.

69586-U12

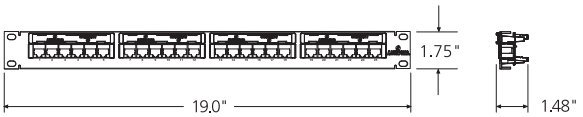

69586-U24, 69586-L24

69586-U48, 69586-L48

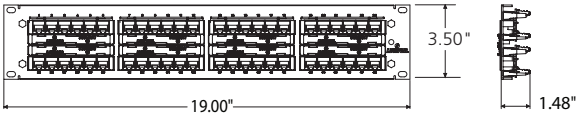

69586-C48

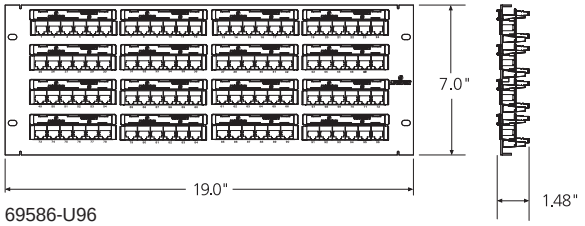

69586-U96

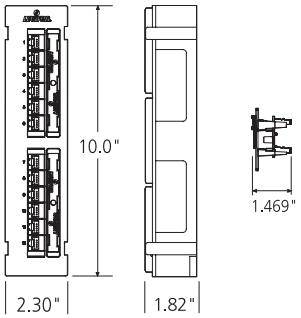

69586-U89

69586-xxx

No Exception Taken
MFIA, Inc
Gary Adovnik
Checking is only for general conformance with the design concept of the project and general compliance with the information given in the contract documents. Any action shown is subject to the requirements of the plans and specifications. Contractor is responsible for: Dimensions, which shall be confirmed and correlated at the job site; fabrication processes and techniques of construction; coordination of his work with that of all other trades; and the satisfactory performance of his work.

06/15/2021

PART NUMBERS

Description	Part No.
Cat 6 Flat 110-Style Patch Panel, 12-Port, 1RU	69586-U12
Cat 6 Flat 110-Style Patch Panel, 24-Port, 1RU	69586-U24
Cat 6 Flat 110-Style Patch Panel with magnifying lens label holder, 24-Port, 1RU	69586-L24
Cat 6 Flat 110-Style Patch Panel, 48-Port, 2RU	69586-U48
Cat 6 Flat 110-Style Patch Panel with magnifying lens label holder, 48-Port, 2RU	69586-L48
Cat 6 Flat 110-Style Patch Panel, 48-Port, 2RU, centralized labeling	69586-C48
Cat 6 110-Style Patch Panel, 96-Port, 4RU	69586-U96
Cat 6 110-Style Patch Block, 12-Port	69586-U89

ANSI/TIA-568-C.2 CAT 6 PARAMETERS

	Connecting Hardware Requirements*	
	@ 100MHz	@ 250MHz
Insertion Loss (IL)	0.20	0.32
Near-end Crosstalk (NEXT)	54.0	46.0
Far-end Crosstalk (FEXT)	43.1	35.1
Return Loss (RL)	24.0	16.0
Transverse Conversion Loss (TCL)	28.0	20.0
Transverse Conversion Transfer Loss (TCTL)	28.0	20.0

*All requirements are minimum allowable except IL requirements are maximum allowable. Connecting hardware shall meet requirements of all parameters from 1-250 MHz. Values in above table are only at specific frequencies and are for references only.

ISO 9001 REGISTERED Quality Manufacturer

D16 6170

Leviton Network Solutions
2222 - 222nd St. SE
Bothell, WA 98021-4416

tel 1-800-824-3005
tel +1-425-486-2222
appeng@leviton.com
www.leviton.com

Asia / Pacific
T +1.631.812.6228
E infoasean@leviton.com

Canada
T +1.514.954.1840
E pcservice@leviton.com

Caribbean
T +1.954.593.1896
E infocaribbean@leviton.com

China
T +852.2774.9876
E infochina@leviton.com

Colombia
T +57.1.743.6045
E infocolombia@leviton.com

Europe
T +33.6.8869.1380
E infoeurope@leviton.com

India / SAARC
T +971.4.886.4722
E infoindia@leviton.com

Mexico
T +52.55.5082.1040
E lsamarketing@leviton.com

Middle East & Africa
T +971.4.886.4722
E lmeinfo@leviton.com

South Korea
T +82.2.3273.9963
E infokorea@leviton.com

Copyright © 2016 Leviton Manufacturing Co., Inc. All rights reserved. Subject to change without notice.

Revised April 2016

Closet Connector Housing (CCH)

one rack unit, holds two CCH connector panels

CORNING

Closet connector housings (CCHs) provide interconnect or cross-connect capabilities between outside plant, riser or distribution cables and opto-electronics. Like other LANscape solutions hardware, the housings accept CCH connector panels. In addition, the housings accept CCH cassettes and CCH modules.
From fiber and cable routing and strain relief, to port labeling and termination, these housings reduce the risk of error that can disrupt networks.

The units are designed for rack mounting in 19-in (48 cm) racks or optional 23-in (58 cm) equipment racks (1.75-in EIA hole spacing). They are available in rack space options of 1U (two panels, cassettes or modules), 2U (four panels, cassettes or modules), 3U (six panels, cassettes or modules) and 4U (12 panels, cassettes or modules). The 1U, 2U and 3U options feature a slide-out tray and see-through, removable top covers. The CCH-04U features a clear door, removable front and rear enclosures and a platinum-colored interior for maximum visibility and access.

Every CCH housing is shipped complete with strain relief brackets, routing clips and guides, and mounting brackets for proper installation. Documentation labels are provided and components can be added as needed to construct a fiber distribution frame for any application. All housings include a removable tinted polycarbonate front door. All size housings have field-installable lock kits available for both front and rear doors.

All CCH housings can also be upgraded for pigtail splicing to full fiber capacity and easy, modular fiber management through the use of CCH Splice Cassettes (CCH-CS), or for easy, modular fiber management when using field-installable connectors through the use of CCH Slack Cassettes (CCH-CF).

Part Number: CCH-01U

Revise and Resubmit
Gary Adovnik, MFIA Inc.
Does not match specification
or district standards
06/15/2021

Features and Benefits

Interconnect and cross-connect capability
Ideal for field connectorization

Removable, translucent top covers (1U, 2U, 3U), removable rear cover (4U)
Visibility and ease of access for installation, testing, and troubleshooting

Internal and external strain-relief options
Flexibility for installation and moves, adds, and changes (MACs)

Accepts panels, modules, and cassettes
Variety of field-termination options

CORNING

Closet Connector Housing (CCH)

one rack unit, holds two CCH connector panels

Features and Benefits

Adaptable to use as a modular splice housing
Splices are stored and protected in same footprint

Standards

Approvals and Listings	Meets ANSI/TIA/EIA-568A and 606
RoHS	Free of hazardous substances according to RoHS 2011/65/EU
UL-Listed	United States and Canadian safety standards

Specifications

General Specifications	
Application	Enterprise Networks, Data Center, Carrier Networks
Mounting Type	Rack 19-in, Rack 23-in, Cabinet-mount
Product Type	Fiber Optic Hardware
Environment	Indoor
Mounting Technology	Flush mount, Protruding, Recessed
Access Type	Front and rear access slidable
Lockable	Yes

Temperature Range	
Operation	-40 °C to 70 °C

Design - Hardware	
Housing Type	CCH
Housing Color	Black, transparent top cover
Height Unit	1U
Locking Availability	Front or rear
Number of Panels per Housing	Up to 2
Pigtail Length	2.25 m
Panel or Module Type	CCH

Closet Connector Housing (CCH)

one rack unit, holds two CCH connector panels

Design - Hardware	
Splice Tray Options	CCH Splice Cassette (CCH-CS)
Housing Material	Powder-coated metal and Polycarbonate Tray
Number of Ports	Up to 24
Fiber Count	Up to 48
Cable entry type	External and Internal strain-relief bracket
Number of splice cassettes	Up to 2
Number of Adapters	Up to 24
Number of pigtails	Up to 48

Mechanical Characteristics	
Dimensions (HxWxD)	4.4 cm x 48.3 cm x 43 cm (1.75 in x 19 in x 17 in)
Weight	3.9 kg

Ordering Information

Part Number	CCH-01U
Product Description	Closet Connector Housing (CCH), one rack unit, holds two CCH connector panels
EAN Code	4056418169491

Shipping Information

Units per Delivery	1/1
Shipping Weight	4.5 kg (10 lb)
Dimensions (HxWxD)	54.61 cm x 57.15 cm x 19.05 cm (21.5 in x 22.5 in x 7.5 in)

RoHS COMPLIANT

Corning Optical Communications LLC • PO Box 489 • Hickory, NC 28603-0489 USA
800-743-2675 • FAX: 828-325-5060 • International: +1-828-901-5000 • www.corning.com/opcomm
A complete listing of the trademarks of Corning Optical Communications is available at www.corning.com/opcomm/trademarks. All other trademarks are the properties of their respective owners. Corning Optical Communications is ISO 9001 certified.
© 2016 Corning Optical Communications. All rights reserved.

Product Information Sheet

LOW PROFILE FIXED SHELF

Shelf provides a space-saving and money-saving alternative for storing non-rack mounted equipment without sacrificing CPI Style. This unique telescoping design delivers between 20" and 36" of continuous support for up to 100 pounds of equipment in less than 1 RMU of rack-mount space!

- Shelf bracket provides front and rear support, attaching with single screw to mounting rails
- Available in 19" & 23" EIA widths, providing 17.5" & 21.5" surface space respectively
- Made of 16-gauge cold rolled steel, finished with semi gloss polyester-hybrid powder coat paint
- Available in solid and vented
- 19"W versions are UL Listed 60950 (File E227626)

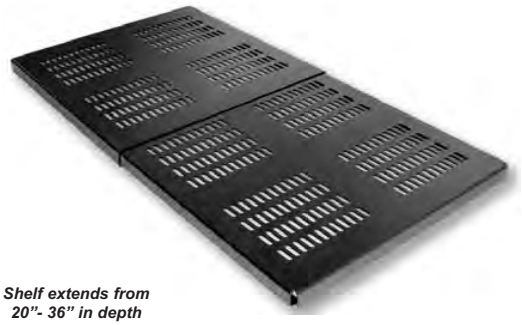

Shelf extends from 20"- 36" in depth

Part Number	Description	Shipping Weight
12573-X19	19"W Solid Shelf	16 lb (7.3 kg)
12573-X23	23"W Solid Shelf	18 lb (8.2 kg)
12610-X19	19"W Vented Shelf	15 lb (6.8 kg)
12610-X23	23"W Vented Shelf	17 lb (7.7 kg)

X=color: 1=Gray, 2=White, 7=Black

No Exception Taken
MFIA, Inc
Gary Adovnik
Checking is only for general conformance with the design concept of the project and general compliance with the information given in the contract documents. Any action shown is subject to the requirements of the plans and specifications. Contractor is responsible for: Dimensions, which shall be confirmed and correlated at the job site; fabrication processes and techniques of construction; coordination of his work with that of all other trades; and the satisfactory performance of his work.

06/15/2021

CHATSWORTH PRODUCTS, INC.

All products quoted are subject to availability based on manufacturing capacity and shipping dates should be considered estimates only. While every effort has been made to ensure the accuracy of all information, CPI does not accept liability for any errors or omissions and reserves the right to change information and descriptions of listed services and products

©2007 Chatsworth Products, Inc. All rights reserved. CPI, Saf-T-Grip, Seismic Frame, SlimFrame and MegaFrame are federally registered trademarks of Chatsworth Products, Inc. CPI Passive Cooling, Cube-iT Plus, EasySwing, FastTrac, Multi-Mount, Structured Termination Systems, TeraFrame, Thinline, QuadraRack and Universal Rack are trademarks of Chatsworth Products, Inc.
All other trademarks belong to their respective companies.

Tripp Lite
1111 West 35th Street
Chicago, IL 60609 USA
Telephone: +(773) 869 1234
E-mail: saleshelp@tripplite.com

Model #: RS-1215-20

Tripp Lite Power Strip - Multiple outlets wherever you need them

Highlights

- Designed for standard 19-inch racks (1U high)
- 12 outlets (6 front / 6 rear)
- 15 ft. cord
- 20-amp circuit breaker

No Exception Taken
MFIA, Inc
Gary Adovnik
Checking is only for general conformance with the design concept of the project and general compliance with the information given in the contract documents. Any action shown is subject to the requirements of the plans and specifications. Contractor is responsible for: Dimensions, which shall be confirmed and correlated at the job site; fabrication processes and techniques of construction; coordination of his work with that of all other trades; and the satisfactory performance of his work.

06/15/2021

Description

Tripp Lite's RS-1215-20 Power Strip offers 20 amp capacity AC power distribution in a versatile multi-mount cabinet. Detachable mounting flanges are configurable for rackmount, wallmount and under-counter installation. Uses only 1 rack space (1U) when installed in any 19 inch rack meeting EIA standards. Unfiltered electrical pass-through makes RS-1215-20 ideal for distributing alternate waveform UPS or generator power in rack enclosures, network closets and more. Includes 12 NEMA5-20R outlets (6 front/6 rear), 15 ft AC power cord and lighted switch with cover prevents risk of accidental turn-off.

PLUG/OUTLET: Input: NEMA 5-20P

Output: 12 NEMA5-20R (6 front & 6 rear)

ELECTRICAL: 120V AC, 50/60Hz, 20A (Requires NEMA 5-20R wall receptacle)

FORMAT: 19 in. rackmount (uses 1 rack space/1U), wallmount, under-counter and more

Applications

- Offers multiple outlet power distribution for multiple loads in 19 inch rackmount, wallmount and under-counter applications, such as internetworking, PC systems, telecommunications, audio/video, security, sound reinforcement and more. Ideal for distribution of UPS, generator or commercially derived AC power to protected equipment.

Package Includes

- RS-1215-20
- Warranty information
- Instruction manual

Features

- Versatile all-metal cabinet with detachable mounting flanges allows rackmount, wallmount, undercounter and other creative mounting options
- Uses one rack space (1U) in standard 19 inch rack ("zero U" mounting possible in many racks)
- Unfiltered electrical pass-through reliably distributes alternate waveform AC power from UPS or generator to supported equipment
- 12 NEMA5-20R output receptacles (6 front/6 rear)

- 15 foot AC cord NEMA5-20P plug connection
- Lighted power switch confirms power on/off status
- Snap-in switch guard prevents accidental turn off
- 20 amp electrical capacity with circuit breaker
- 120V AC, 50/60Hz electrical compatibility

Specifications

OUTPUT	
Frequency compatibility	50 / 60 Hz
Circuit Breaker (amps)	20
Outlet quantity / type	12 NEMA 5-15/20R
Outlet orientation	6 front facing / 6 rear facing
INPUT	
Nominal Input Voltage(s) Supported	120V AC
Recommended Electrical Service	20A 120V
Input connection type	NEMA 5-20P
Input cord length (ft.)	15
Input cord length (m)	4.572
Voltage compatibility (VAC)	120
LEDS ALARMS & SWITCHES	
Switches	Red illuminated 2 positon switch controls power to all outlets
Locking switch cover	Transparent locking switch cover prevents accidental shutoff
PHYSICAL	
Unit Dimensions (HWD/in)	1.75 (1U) x 17.5 x 4.5
Unit Dimensions (HWD/cm)	4.445 x 44.45 x 11.4
Unit weight (lbs)	4.6
Unit weight (kg)	2.09
Material of construction	Sheet metal
Receptacle Color	Black
AC line cord color	Black
Form factors supported	1U rackmount, wall-mount and undercounter installation supported
Outlets center to center measurement	Distance between Front outlets = 51.6mm; Distance between Rear outlets = 71.1mm
SPECIAL FEATURES	
TVSS grounding	Back panel nut and bolt grounding lug
CERTIFICATIONS	
UL1363 (Power Tap)	UL1363 (UR status)
cUL / CSA (Canada)	cUL

WARRANTY	
Product Warranty Period (Worldwide)	Lifetime limited warranty

More information, including related products, owner's manuals, and additional technical specifications, can be found online at www.tripplite.com/en/products/model.cfm?txtModelID=202.

Copyright © 2012 Tripp Lite. All rights reserved. All trademarks are the sole property of their respective owners. Tripp Lite has a policy of continuous improvement. Specifications are subject to change without notice. Photos may differ slightly from final products.

Product Cut Sheet

UNIVERSAL CABLE RUNWAY

Our most popular cable runway is designed for value conscious customers. The Universal Cable Runway offers the industry standard features you've come to expect. With the runway supported every 5' (1.5 m), maximum load with minimal deflection is 132 lb/ft (59.9 kg).

- Made of 3/8" x 1-1/2" x .065" (9.53 mm x 38 mm x 1.65 mm) wall rectangular steel tubing
- Cross members welded at 12" (300 mm) intervals
- Individually boxed to prevent scratches and damage
- Standard length is 9'-11 1/2"/119.5" (3035 mm)
- Underwriters Laboratory Classified for suitability as an equipment grounding conductor only (must remove paint or use ground straps)
- Installation Best Practices includes Runway Elevation Kit

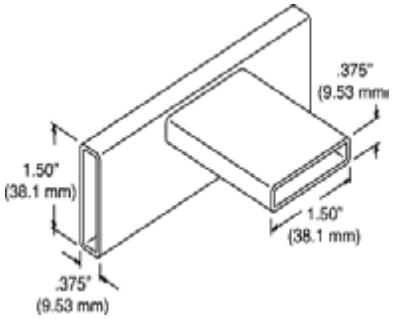

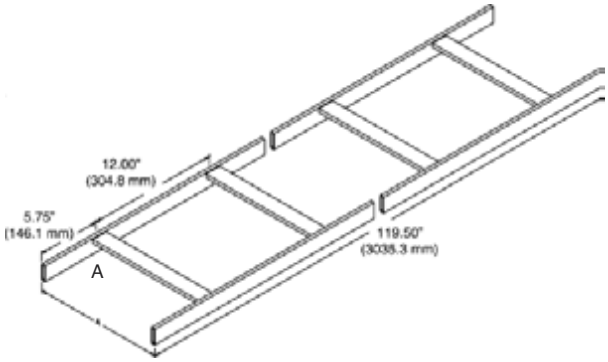

No Exception Taken
MFIA, Inc
Gary Adovnik
Checking is only for general conformance with the design concept of the project and general compliance with the information given in the contract documents. Any action shown is subject to the requirements of the plans and specifications. Contractor is responsible for: Dimensions, which shall be confirmed and correlated at the job site; fabrication processes and techniques of construction; coordination of his work with that of all other trades; and the satisfactory performance of his work.

06/15/2021

Verify color preference with architect or/and district

Part Number	Width (Dim. A) in (mm)	Shipping Weight lb (kg)
10250-X04	4 (100)	18 (8.2)
10250-X06	6 (150)	19 (8.6)
10250-X09	9 (230)	20 (9.1)
10250-X12	12 (300)	25 (11.3)
10250-X15	15 (380)	27 (12.2)
10250-X18	18 (460)	29 (13.2)
10250-X24	24 (610)	32 (14.5)
10250-X31	30 (760)	35 (15.7)
10250-X37	36 (910)	38 (17.2)

X=color; 1=Gray, 2=Computer Beige, 7=Black, E=Glacier White.

CHATSWORTH PRODUCTS

©2013 Chatsworth Products, Inc. All rights reserved. CPI, CPI Passive Cooling, GlobalFrame, MegaFrame, Saf-T-Grip, Seismic Frame, SlimFrame, TeraFrame, Cube-iT Plus, Evolution, OnTrac, Velocity and QuadraRack are federally registered trademarks of Chatsworth Products. eConnect and Simply Efficient are trademarks of Chatsworth Products. All other trademarks belong to their respective companies. 6/13

Product Information Sheet

CABLE RUNWAY RADIUS DROP

Mounts to cable stringer or cross member to help maintain proper Category 5/5e/6 or fiber bend radius.

- Quick and easy installation using clevis pin attachment
- Fits 6", 9", 12", 15" and 18" cross member tubing
- For use only with runs on CPI Universal runway (Series 10250)
- Provides 3" bend radius
- Products 5" wide (12100-X06, 12101-X03) drop into CPI's 6" wide vertical cabling sections
- Supplied with 1 1/2" cable spools (P/N 15003-001) to separate and guide cables
- Sold individually

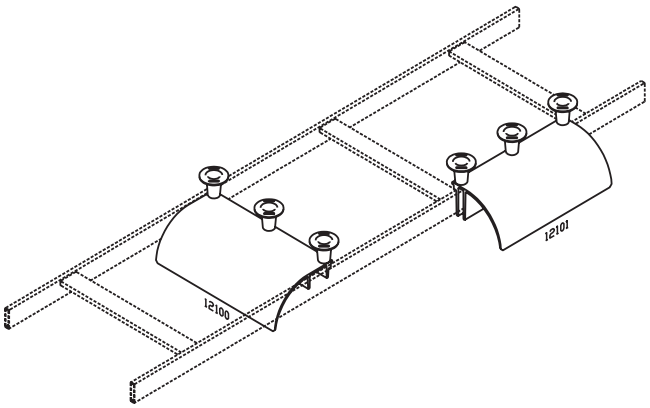

Runway Radius Drop, Cross Member

- May be used on other runway series with Cable Runway Movable Cross Member (12115 series)

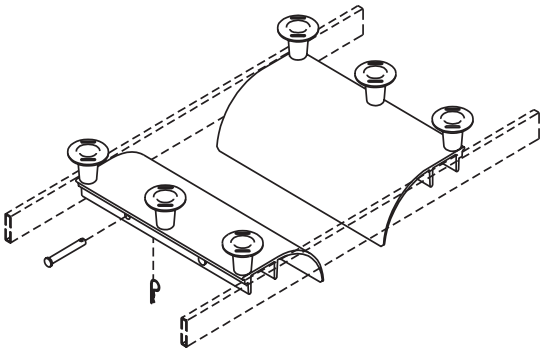

Part Number	Cable Runway Width	Product Width	Color	Cable Spools
12100-106	6"	5"	Gray	2 ea.
12100-109	9"	8"	Gray	2 ea.
12100-112	12"	11"	Gray	3 ea.
12100-118	18"	17"	Gray	3 ea.
12100-206	6"	5"	White	2 ea.
12100-209	9"	8"	White	2 ea.
12100-212	12"	11"	White	3 ea.
12100-218	18"	17"	White	3 ea.
12100-706	6"	5"	Black	2 ea.
12100-709	9"	8"	Black	2 ea.
12100-712	12"	11"	Black	3 ea.
12100-715	15"	14"	Black	3 ea.
12100-718	18"	17"	Black	3 ea.

Runway Radius Drop, Stringer

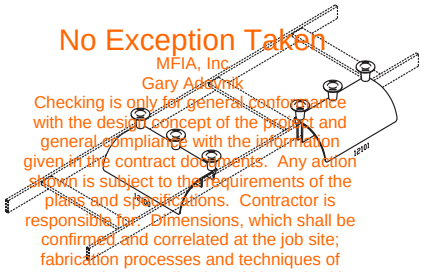

Part Number	Runway Application	Product Width	Color	Cable Spools
12101-101	Universal	10-1/4"	Gray	3 ea.
12101-102	Telco	7-3/4"	Gray	2 ea.
12101-103	Misc.	5"	Gray	2 ea.
12101-201	Universal	10-1/4"	White	3 ea.
12101-202	Telco	7-3/4"	White	2 ea.
12101-203	Misc.	5"	White	2 ea.
12101-701	Universal	10-1/4"	Black	3 ea.
12101-702	Telco	7-3/4"	Black	2 ea.
12101-703	Misc.	5"	Black	2 ea.

No Exception Taken
MFIA, Inc
Gary Adelnik
Checking is only for general conformance with the design concept of the project and general compliance with the information given in the contract documents. Any action shown is subject to the requirements of the plans and specifications. Contractor is responsible for: Dimensions, which shall be confirmed and correlated at the job site; fabrication processes and techniques of construction; coordination of his work with that of all other trades; and the satisfactory performance of his work.

06/15/2021

Verify color preference with architect or/and district

©2001 Chatsworth Products, Inc. 11/02, REV. 2/05

Product Cut Sheet

TRIANGULAR SUPPORT BRACKET, STEEL

Triangular Support Bracket provides wall support for cable runway. Made of cold rolled steel. Load rating is 400 lb (181.4 kg).

Kit consists of:

- (1) vertical wall-mounting bracket
- (1) runway support channel
- (1) angle support channel
- (3) clevis pins (5/16" diameter) & cotter pins
- (2) 5/16-18 x 2 1/4" J-bolts
- (2) 5/16-18 hex nuts & 5/16 lock washers

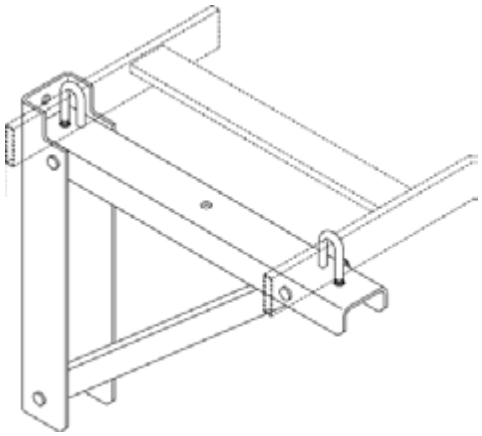

Part Number	Runway Widths in (mm)	Shipping Weight lb (kg)
11746-X12	6, 12 (150, 300)	5 (2.3)
11746-X18	18 (460)	8 (3.6)
11746-X24	24 (610)	9 (4.1)

X=color: 0=Gold, 1=Gray, 2=Computer Beige, 7=Black, E=Glacier White. Kits have gold colored hardware. Gray (-1) and Black (-7) kits have black colored hardware.

No Exception Taken
MFIA, Inc
Gary Adovnik
Checking is only for general conformance with the design concept of the project and general compliance with the information given in the contract documents. Any action shown is subject to the requirements of the plans and specifications. Contractor is responsible for: Dimensions, which shall be confirmed and correlated at the job site; fabrication processes and techniques of construction; coordination of his work with that of all other trades; and the satisfactory performance of his work.

06/15/2021

Verify color preference with architect or/and district

CHATSWORTH PRODUCTS

©2013 Chatsworth Products, Inc. All rights reserved. CPI, CPI Passive Cooling, GlobalFrame, MegaFrame, Saf-T-Grip, Seismic Frame, SlimFrame, TeraFrame, Cube-iT Plus, Evolution, OnTrac, Velocity and QuadraRack are federally registered trademarks of Chatsworth Products. eConnect and Simply Efficient are trademarks of Chatsworth Products. All other trademarks belong to their respective companies. 6/13

Product Information Sheet

WALL ANGLE SUPPORT KIT

2" x 2" x .105" (50 mm x 50 mm x 2.67 mm) steel support angle is designed for wall mounting specific widths of Cable Runway.

- Kit consists of:
  - 1 each wall angle
  - 2 each 5/16-18 x 2 1/4" J-bolts
  - 2 each 5/16-18 hex nuts
  - 2 each 5/16 lock washers

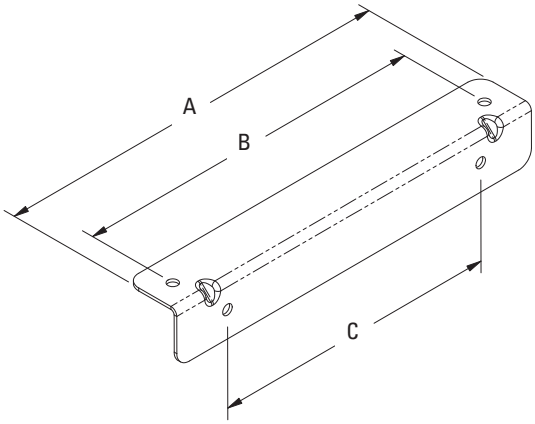

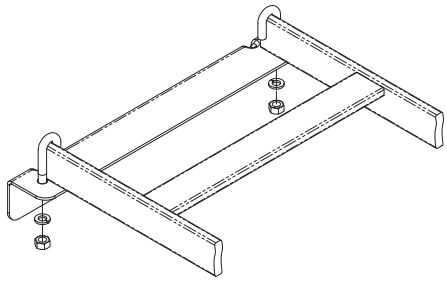

11421	Wall Angle Support Kit

Color	
1	Gray
2	Computer White
7	Black
0	Gold

	Runway Width	Dim. A	Dim. B	Dim. C
04	4" (100 mm)	6" (150 mm)	4.31" (109.5 mm)	4.31" (109.5 mm)
06	6" (150 mm)	8" (200 mm)	6.31" (160.3 mm)	4" (100 mm)
09	9" (230 mm)	11" (280 mm)	9.31" (236.5 mm)	7" (180 mm)
10	10" (250 mm)	12" (300 mm)	10.31" (261.9 mm)	8" (200 mm)
12	12" (300 mm)	14" (360 mm)	12.31" (312.7 mm)	10" (250 mm)
15	15" (380 mm)	17" (430 mm)	15.31" (388.9 mm)	13" (330 mm)
18	18" (460 mm)	20" (510 mm)	18.31" (465.1 mm)	16" (410 mm)
20	20" (510 mm)	22" (560 mm)	20.31" (515.9 mm)	18" (457 mm)
24	24" (610 mm)	26" (660 mm)	24.31" (617.5 mm)	22" (558 mm)
30	30" (760 mm)	32" (810 mm)	30.31" (769.9 mm)	28" (710 mm)

11421	-	X	XX

Note: Gray and black kits include black J-Bolts and hardware. White and gold kits include gold J-Bolts and hardware.

No Exception Taken
MFIA, Inc
Gary Adovnik
Checking is only for general conformance with the design concept of the project and general compliance with the information given in the contract documents. Any action shown is subject to the requirements of the plans and specifications. Contractor is responsible for: Dimensions, which shall be confirmed and correlated at the job site; fabrication processes and techniques of construction; coordination of his work with that of all other trades; and the satisfactory performance of his work.

06/15/2021

Verify color preference with architect or/and district

CHATSWORTH PRODUCTS, INC.

©2009 Chatsworth Products, Inc. All rights reserved. CPI, CPI Passive Cooling, Saf-T-Grip, Seismic Frame, SlimFrame and MegaFrame are federally registered trademarks of Chatsworth Products, Inc. Cube-iT Plus, Evolution, OnTrac, QuadraRack, Simply Efficient and TeraFrame are trademarks of Chatsworth Products, Inc. All other trademarks belong to their respective companies. 09/09

Product Cut Sheet

RACK SEISMIC GUSSET KIT

Gusset kit can be added to any CPI Universal rack to stiffen critical load-supporting joints. Whenever possible the top of the rack should be stabilized using CPI Bracing Kit (P/N 10562-001).

- Adds additional support to critical rack joints
- Kit can be added to any CPI universal (46XXX series) rack

Gusset kit includes:
4 each welded steel bolt-on gussets
8 each 1/2-13 x 1-1/4" bolts
8 each 1/2-13 nuts

NOTE: Seismic installation requirements should be approved by a licensed structural engineer.

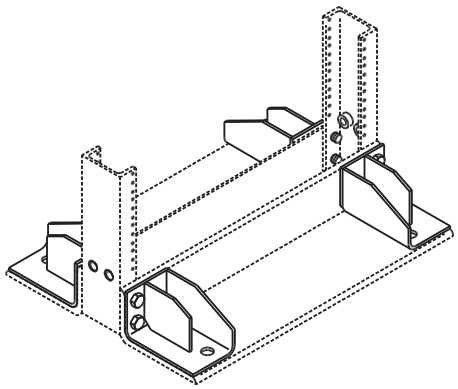

Part Number	Color	Shipping Weight
11592-101	Gusset Kit, Gray	10 lb
11592-201	Gusset Kit, White	10 lb
11592-701	Gusset Kit, Black	10 lb

No Exception Taken
MFIA, Inc
Gary Adovnik
Checking is only for general conformance with the design concept of the project and general compliance with the information given in the contract documents. Any action shown is subject to the requirements of the plans and specifications. Contractor is responsible for: Dimensions, which shall be confirmed and correlated at the job site; fabrication processes and techniques of construction; coordination of his work with that of all other trades; and the satisfactory performance of his work.

06/15/2021

Verify color preference with architect or/and district

CHATSWORTH PRODUCTS, INC.

©2010 Chatsworth Products, Inc. All rights reserved. CPI, CPI Passive Cooling, MegaFrame, Saf-T-Grip, Seismic Frame, SlimFrame, TeraFrame, Cube-iT Plus, Evolution, OnTrac, and QuadraRack are federally registered trademarks of Chatsworth Products, Inc. GlobalFrame, Simply Efficient and Velocity are trademarks of Chatsworth Products, Inc. All other trademarks belong to their respective companies. 12/10

The following excerpt are pages from the North American Product Technical Guide, Volume 2: Anchor Fastening, Edition 19.

Please refer to the publication in its entirety for complete details on this product including data development, product specifications, general suitability, installation, corrosion and spacing and edge distance guidelines.
US&CA: https://submittals.us.hilti.com/PTGVol2/

To consult directly with a team member regarding our anchor fastening products, contact Hilti's team of technical support specialists between the hours of 7:00am – 6:00pm CST.
US: 877-749-6337 or HNATechnicalServices@hilti.com
CA: 1-800-363-4458, ext. 6 or CATechnicalServices@hilti.com

Hilti, Inc.
7250 Dallas Parkway, Suite 1000
Plano, TX 75024

1-800-879-8000
www.hilti.com

No Exception Taken
MFIA, Inc
Gary Adovnik
Checking is only for general conformance with the design concept of the project and general compliance with the information given in the contract documents. Any action shown is subject to the requirements of the plans and specifications. Contractor is responsible for: Dimensions, which shall be confirmed and correlated at the job site; fabrication processes and techniques of construction; coordination of his work with that of all other trades; and the satisfactory performance of his work.

06/15/2021

3.3.12 HDI+, HDI-L+, AND HDI DROP IN ANCHORS

PRODUCT DESCRIPTION

HDI+, HDI-L+, and HDI Drop-in anchors

Anchor System		Features and Benefits
	HDI-L+ and HDI+ with Auto setting tools 1/4" to 1/2"	• Anchor, setting tool and Hilti drill bit form a matched tolerance system to provide reliable fastenings • Allows shallow embedment without sacrificing performance • Lip allows accurate flush surface setting, independent of hole depth for the HDI-L+ • Ideal for repetitive fastenings with threaded rods of equal length • HDI+ and HDI-L+ have an innovative stepped plug that reduces number of hammer blows by up to 50% • HDI+ and HDI-L+ can be installed with the new HDI+ Setting Tool system (stop drill bit and machine setting tool) for improved productivity
	HDI and Manual setting tool 5/8" to 3/4"	

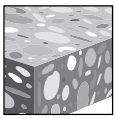

Uncracked concrete

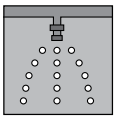

Fire sprinkler listings

Approvals/Listings	
FM (Factory Mutual)	Pipe hanger components for automatic sprinkler systems HDI+ 3/8, HDI-L+ 3/8, HDI+1/2, HDI-L+ 1/2, HDI 5/8 and HDI 3/4
UL and cUL (Underwriters Laboratory)	Pipe hanger equipment for fire protection services HDI+ 3/8, HDI-L+ 3/8, HDI+1/2, HDI-L+ 1/2, HDI 5/8 and HDI 3/4

FM APPROVED

c UL us LISTED

INSTALLATION PARAMETERS

Table 1 - Hilti HDI+, HDI-L+ and HDI specifications[1]

Setting Information	Symbol	Units	HDI+ and HDI-L+			HDI	
			1/4	3/8	1/2	5/8	3/4
Insert thread	d	UNC	1/4-20	3/8-16	1/2-13	5/8-11	3/4-10
Nominal bit diameter	d_{bit}	in.	3/8	1/2	5/8	27/32	1
Nominal embedment Anchor length Hole depth	h_{nom} ℓ h_o	in. (mm)	1 (25)	1-9/16 (40)	2 (51)	2-9/16 (65)	3-3/16 (81)
Useable thread length	ℓ_{th}	in. (mm)	7/16 (11)	5/8 (15)	11/16 (17)	7/8 (22)	1-3/8 (34)
Installation torque	T_{inst}	ft-lb (Nm)	4 (5)	11 (15)	22 (30)	37 (50)	80 (109)
Minimum slab thickness	h	in. (mm)	3 (76)	3-1/8 (79)	4 (102)	5-1/8 (130)	6-3/8 (162)

1 HDI+ and HDI-L+ are available in 1/4-, 3/8- and 1/2-in. The HDI is available in 5/8- and 3/4-in.

MATERIAL SPECIFICATIONS

HDI+, HDI-L and HDI anchors are manufactured from mild carbon steel. Anchor bodies are zinc plated in accordance with ASTM B633, AC 1, Type III
HDI stainless steel anchors are manufactured from AISI Type 303 stainless steel

DESIGN DATA IN CONCRETE USING ALLOWABLE STRESS DESIGN

Table 2 - Hilti HDI+, HDI-L+ and HDI carbon steel allowable loads in concrete[1,2]

Anchor type	Nominal anchor diameter in.	f'_c = 2,000				f'_c = 4,000				f'_c = 6,000			
		Tension, lb (kN)		Shear, lb (kN)		Tension, lb (kN)		Shear, lb (kN)		Tension, lb (kN)		Shear, lb (kN)	
HDI+	1/4	385	(1.7)	450	(2.0)	510	(2.3)	625	(2.8)	640	(2.8)	700	(3.1)
	3/8	635	(2.8)	965	(4.3)	920	(4.1)	1,250	(5.6)	1,260	(5.6)	1,500	(6.7)
	1/2	945	(4.2)	1,500	(6.7)	1,605	(7.1)	2,125	(9.5)	1,950	(8.7)	2,500	(11.1)
HDI+	5/8	1,875	(8.3)	2,500	(11.1)	2,920	(13.0)	3,250	(14.5)	3,715	(16.5)	3,750	(16.7)
	3/4	2,500	(11.1)	3,875	(17.2)	4,065	(18.1)	5,000	(22.2)	5,565	(24.8)	5,500	(24.5)

Table 3 - Hilti HDI+, HDI-L+ and HDI carbon steel ultimate loads in concrete[1]

Anchor type	Nominal anchor diameter in.	f'_c = 2,000				f'_c = 4,000				f'_c = 6,000			
		Tension, lb (kN)		Shear, lb (kN)		Tension, lb (kN)		Shear, lb (kN)		Tension, lb (kN)		Shear, lb (kN)	
HDI+	1/4	1,535	(6.8)	1,800	(8.0)	2,040	(9.1)	2,500	(11.1)	2,555	(11.4)	2,800	(12.5)
	3/8	2,540	(11.3)	3,850	(17.1)	3,685	(16.4)	5,000	(22.2)	5,035	(22.4)	6,000	(26.7)
	1/2	3,780	(16.8)	6,000	(26.7)	6,425	(28.6)	8,500	(37.8)	7,810	(34.7)	10,000	(44.5)
HDI+	5/8	7,500	(33.4)	10,000	(44.5)	11,685	(52.0)	13,000	(57.8)	14,865	(66.1)	15,000	(66.7)
	3/4	10,000	(44.5)	15,500	(68.9)	16,260	(72.3)	20,000	(89.0)	22,250	(99.0)	22,000	(97.9)

1 The shear tests were conducted with SAE Grade 5 bolts with minimum yield strength of 85 ksi and minimum tension strength of 120 ksi. Shear testing for the 1/4-in. models were conducted with SAE Grade 8 bolts with minimum yield strength of 120 ksi and minimum tension strength of 150 ksi in 6,000 psi concrete. High-strength bolts were used to force concrete failure modes. When using steel bolts with a lower tensile strength, steel failure must be considered.

2 Allowable loads calculated with a factor of safety of 4.

Table 4 - Hilti HDI+, HDI-L+ and HDI carbon steel allowable loads in lightweight concrete and lightweight concrete poured over metal deck[1,2,3,4]

Anchor type	Nominal anchor diameter in.	3,000 psi lightweight concrete				3,000 psi lightweight concrete over metal deck							
						Upper flute				Lower flute			
		Tension, lb (kN)		Shear, lb (kN)		Tension, lb (kN)		Shear, lb (kN)		Tension, lb (kN)		Shear, lb (kN)	
HDI+	1/4	465	(2.1)	340	(1.5)	530	(2.4)	335	(1.5)	375	(1.7)	250	(1.1)
	3/8	720	(3.2)	940	(4.2)	810	(3.6)	1,010	(4.5)	500	(2.2)	500	(2.2)
	1/2	1,035	(4.6)	1,700	(7.6)	1,035	(4.6)	1,755	(7.8)	625	(2.8)	750	(3.3)
HDI+	5/8	1,465	(6.5)	2,835	(12.6)	-		-		875	(3.9)	875	(3.9)
	3/4	2,075	(9.2)	3,680	(16.4)	-		-		1,250	(5.6)	1,000	(4.4)

1 The shear tests were conducted with SAE Grade 5 bolts with minimum yield strength of 85 ksi and minimum tension strength of 120 ksi. Shear testing for the 1/4-in. models were conducted with SAE Grade 8 bolts with minimum yield strength of 120 ksi and minimum tension strength of 150 ksi in 6,000 psi concrete. High-strength bolts were used to force concrete failure modes. When using steel bolts with a lower tensile strength, steel failure must be considered.

2 Minimum compressive strength of structural lightweight concrete is 3,000 psi.

3 See figure 1 for typical details.

4 Allowable loads calculated with a factor of safety of 4.

Table 5 - Hilti HDI stainless steel allowable loads in concrete[1,2,3]

Nominal anchor diameter in.	Nominal anchor	f'_c = 4,000				f'_c = 6,000			
		Tension, lb (kN)		Shear, lb (kN)		Tension, lb (kN)		Shear, lb (kN)	
HDI+	1/4	480	(2.1)	600	(2.7)	740	(3.3)	600	(2.7)
	3/8	1,040	(4.6)	1,230	(5.5)	1,460	(6.5)	1,230	(5.5)
	1/2	1,840	(8.2)	2,760	(12.3)	2,410	(10.7)	2,760	(12.3)
HDI+	5/8	2,630	(11.7)	4,510	(20.1)	3,770	(16.8)	4,510	(20.1)
	3/4	3,830	(17.0)	5,580	(24.8)	5,030	(22.4)	5,580	(24.8)

Table 6 - Hilti HDI stainless steel ultimate loads in concrete[1,2]

Nominal anchor diameter in.	Nominal anchor	f'_c = 4,000				f'_c = 6,000			
		Tension, lb (kN)		Shear, lb (kN)		Tension, lb (kN)		Shear, lb (kN)	
HDI+	1/4	1,930	(8.6)	2,400	(10.7)	2,950	(13.1)	2,400	(10.7)
	3/8	4,170	(18.5)	4,920	(21.9)	5,850	(26.0)	4,920	(21.9)
	1/2	7,350	(32.7)	11,040	(49.1)	9,630	(42.8)	11,040	(49.1)
HDI+	5/8	10,540	(46.9)	18,040	(80.2)	15,100	(67.2)	18,040	(80.2)
	3/4	15,340	(68.2)	22,320	(99.3)	20,130	(89.5)	22,320	(99.3)

1 Stainless steel models available in HDI version only.

2 Shear testing conducted with 18-8 stainless steel bolts.

3 Allowable loads calculated with a factor of safety of 4.

Figure 1 - Installation of Hilti HDI+ and HDI drop-in anchor in the soffit of concrete over metal deck floor and roof assemblies W – deck

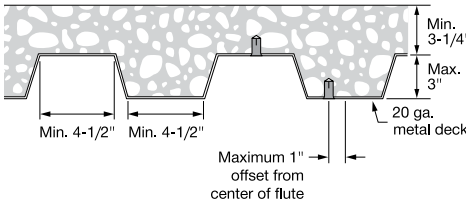

Combined shear and tension loading

$$\left(\frac{N_d}{N_{rec}}\right)^{5/3} + \left(\frac{V_d}{V_{rec}}\right)^{5/3} \leq 1.0$$

Anchor spacing and edge distance guidelines

Anchor spacing adjustment factors

s = Actual Spacing

s_{min} = 2.0 h_{nom}

s_{cr} = 3.5 h_{nom}

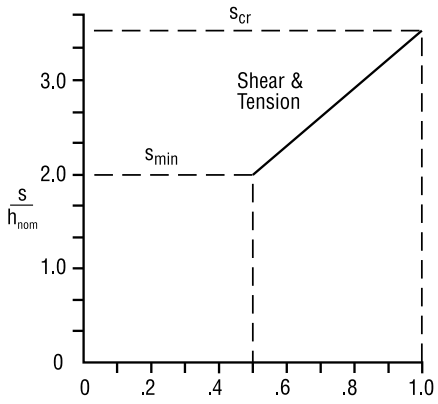

Anchor spacing adjustment Factor

Edge distance adjustment factors

c = Actual edge distance

c_{min} = 2.0 h_{nom}

c_{cr} = 3.0 h_{nom}

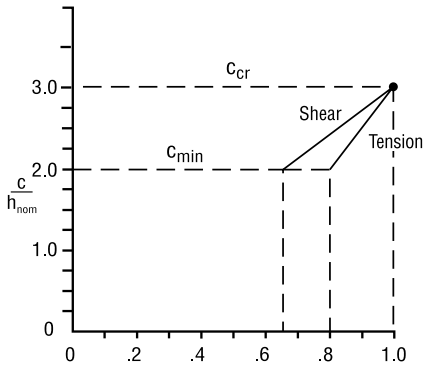

Edge distance adjustment factor

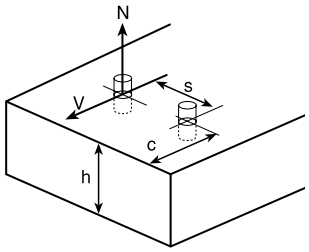

Influence of anchor spacing and edge distance f_A and f_R

Anchor Size		h_{nom}	
in.	(mm)	in.	(mm)
1/4	(6.4)	1	(25)
3/8	(9.5)	1-9/16	(40)
1/2	(12.7)	2	(51)
5/8	(15.8)	2-9/16	(65)
3/4	(19.1)	3-3/16	(81)

h_{nom} = nominal embedment depth

Table 7 - Load adjustment factors for Hilti HDI drop-in anchors in concrete

Load adjustment factors for anchor spacing f_A							Load adjustment factors for edge distance f_R											
Tension/shear loads							Tension f_{RN}							Shear f_{RV}				
Spacing s		Anchor diameter					Edge distance c		Anchor diameter					Anchor diameter				
in.	(mm)	1/4	3/8	1/2	5/8	3/4	in.	(mm)	1/4	3/8	1/2	5/8	3/4	1/4	3/8	1/2	5/8	3/4
2	(51)	.50					2	(51)	.80					.65				
2-1/2	(64)	.67					2-1/2	(64)	.90					.83				
3	(76)	.83	.50				3	(76)	1.0	.80				1.0	.65			
3-1/2	(89)	1.0	.58				3-1/2	(89)		.85					.73			
4	(102)		.69	.50			4	(102)		.91	.80				.85	.65		
4-1/2	(114)		.79	.58			4-1/2	(114)		.98	.85				.96	.74		
5	(127)		.90	.67	.50		5	(127)		1.0	.90	.80			1.0	.83	.65	
5-1/2	(140)		1.0	.75	.55		5-1/2	(140)			.95	.83				.91	.70	
6	(152)			.83	.61	.50	6	(152)			1.0	.87				1.0	.77	
7	(178)			1.0	.74	.57	6-1/2	(165)				.91	.80				.84	.65
8	(203)				.87	.67	7	(178)				.95	.84				.91	.72
9	(229)				1.0	.77	8	(203)				1.0	.90				1.0	.83
10	(254)					.88	9	(229)					.96					.94
11	(279)					.98	10	(254)					1.0					1.0
12	(305)					1.0												
s_{min} = 2.0 h_{nom} s_{cr} = 3.5 h_{nom} $f_A = 0.33 \frac{s}{h_{nom}} - 0.17$ for $s_{cr} > s > s_{min}$							c_{min} =2.0 h_{nom} c_{cr} = 3.0 h_{nom} $f_{RN} = 0.2 \frac{c}{h_{nom}} + 0.4$ for $c_{cr} > c > c_{min}$							c_{min} = 2.0 h_{nom} c_{cr} = 3.0 h_{nom} $f_{RV} = 0.35 \frac{c}{h_{nom}} - 0.05$ for $c_{cr} > c > c_{min}$				

INSTALLATION INSTRUCTIONS

Manufacturer's Printed Installation Instructions (MPII) are included with each product package. They can also be viewed or downloaded at www.hilti.com. Because of the possibility of changes, always verify that downloaded MPII are current when used. Proper installation is critical to achieve full performance. Training is available on request. Contact Hilti Technical Services for applications and conditions not addressed in the MPII.

ORDERING INFORMATION[1]

HDI+, HDI-L+ and HDI

Carbon steel

Description	Description	Anchor thread size	Qty / box
HDI+ 1/4	**HDI-L+ 1/4**	1/4	100
HDI+ 3/8	**HDI-L+ 3/8**	3/8	50
HDI+ 1/2	**HDI-L+ 1/2**	1/2	50
HDI 5/8	**–**	5/8	25
HDI 3/4	**–**	3/4	25

HDI-SS anchors

Stainless steel

Description	Anchor thread size	Qty / box
HDI 1/4 SS303	1/4	100
HDI 3/8 SS303	3/8	50
HDI 1/2 SS303	1/2	50
HDI 5/8 SS303	5/8	25
HDI 3/4 SS303	3/4	25

Setting tools for HDI and HDI-SS anchors

Description	Anchor thread size
HST 5/8 Setting Tool	5/8
HST 3/4 Setting Tool	3/4

Setting Tools for HDI+ and HDI-L+

Anchor thread size	Description
1/4	HST 1/4 Setting tool
	HSD-MM 1/4 (TE-C-24D6 1/4 Setting tool)
	HDI+ Setting Tool includes a TE-CX 3/8x1 carbide bit
3/8	HST 3/8 Setting tool
	HSD-MM 3/8 (TE-C-24SD10 3/8 Setting tool)
	HDI+ Setting Tool includes a TE-CX 1/2x1-9/16 carbide bit
1/2	HST 1/2 Setting tool
	HSD-MM 1/2 (TE-C-24SD12 1/2 Setting tool)
	HDI+ Setting Tool includes a TE-CX 5/8x2 carbide bit

1 All dimensions in inches

Product Cut Sheet

UNIVERSAL CABLE RUNWAY

Our most popular cable runway is designed for value conscious customers. The Universal Cable Runway offers the industry standard features you've come to expect. With the runway supported every 5' (1.5 m), maximum load with minimal deflection is 132 lb/ft (59.9 kg).

- Made of 3/8" x 1-1/2" x .065" (9.53 mm x 38 mm x 1.65 mm) wall rectangular steel tubing
- Cross members welded at 12" (300 mm) intervals
- Individually boxed to prevent scratches and damage
- Standard length is 9'-11 1/2"/119.5" (3035 mm)
- Underwriters Laboratory Classified for suitability as an equipment grounding conductor only (must remove paint or use ground straps)
- Installation Best Practices includes Runway Elevation Kit

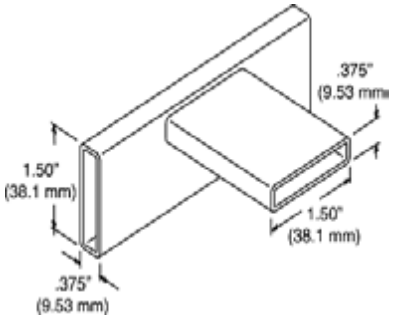

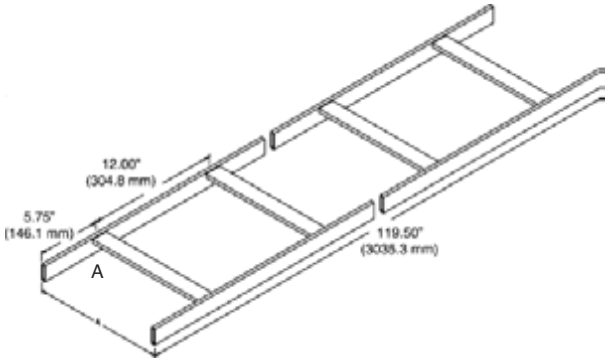

No Exception Taken
MFIA, Inc
Gary Adovnik
Checking is only for general conformance with the design concept of the project and general compliance with the information given in the contract documents. Any action shown is subject to the requirements of the plans and specifications. Contractor is responsible for: Dimensions, which shall be confirmed and correlated at the job site; fabrication processes and techniques of construction; coordination of his work with that of all other trades; and the satisfactory performance of his work.

06/15/2021

Verify color preference with architect or/and district

Part Number	Width (Dim. A) in (mm)	Shipping Weight lb (kg)
10250-X04	4 (100)	18 (8.2)
10250-X06	6 (150)	19 (8.6)
10250-X09	9 (230)	20 (9.1)
10250-X12	12 (300)	25 (11.3)
10250-X15	15 (380)	27 (12.2)
10250-X18	18 (460)	29 (13.2)
10250-X24	24 (610)	32 (14.5)
10250-X31	30 (760)	35 (15.7)
10250-X37	36 (910)	38 (17.2)

X=color; 1=Gray, 2=Computer Beige, 7=Black, E=Glacier White.

CHATSWORTH PRODUCTS

©2013 Chatsworth Products, Inc. All rights reserved. CPI, CPI Passive Cooling, GlobalFrame, MegaFrame, Saf-T-Grip, Seismic Frame, SlimFrame, TeraFrame, Cube-iT Plus, Evolution, OnTrac, Velocity and QuadraRack are federally registered trademarks of Chatsworth Products. eConnect and Simply Efficient are trademarks of Chatsworth Products. All other trademarks belong to their respective companies. 6/13

Product Information Sheet

CABLE RUNWAY RADIUS DROP

Mounts to cable stringer or cross member to help maintain proper Category 5/5e/6 or fiber bend radius.

- Quick and easy installation using clevis pin attachment
- Fits 6", 9", 12", 15" and 18" cross member tubing
- For use only with runs on CPI Universal runway (Series 10250)
- Provides 3" bend radius
- Products 5" wide (12100-X06, 12101-X03) drop into CPI's 6" wide vertical cabling sections
- Supplied with 1 1/2" cable spools (P/N 15003-001) to separate and guide cables
- Sold individually

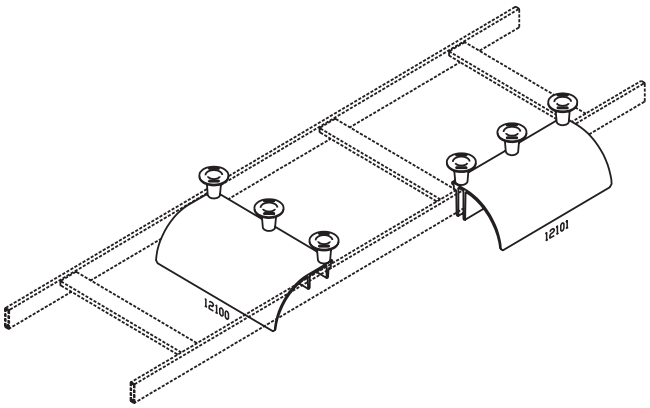

Runway Radius Drop, Cross Member

- May be used on other runway series with Cable Runway Movable Cross Member (12115 series)

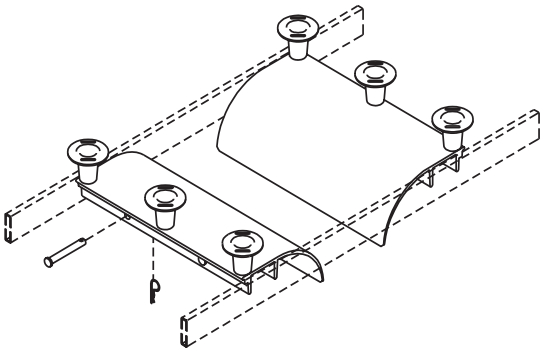

Part Number	Cable Runway Width	Product Width	Color	Cable Spools
12100-106	6"	5"	Gray	2 ea.
12100-109	9"	8"	Gray	2 ea.
12100-112	12"	11"	Gray	3 ea.
12100-118	18"	17"	Gray	3 ea.
12100-206	6"	5"	White	2 ea.
12100-209	9"	8"	White	2 ea.
12100-212	12"	11"	White	3 ea.
12100-218	18"	17"	White	3 ea.
12100-706	6"	5"	Black	2 ea.
12100-709	9"	8"	Black	2 ea.
12100-712	12"	11"	Black	3 ea.
12100-715	15"	14"	Black	3 ea.
12100-718	18"	17"	Black	3 ea.

Runway Radius Drop, Stringer

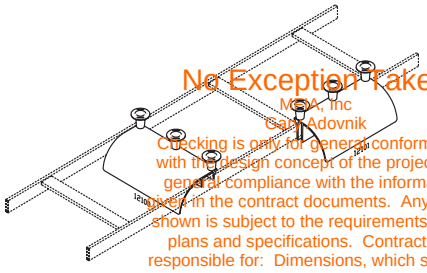

Part Number	Runway Application	Product Width	Color	Cable Spools
12101-101	Universal	10-1/4"	Gray	3 ea.
12101-102	Telco	7-3/4"	Gray	2 ea.
12101-103	Misc.	5"	Gray	2 ea.
12101-201	Universal	10-1/4"	White	3 ea.
12101-202	Telco	7-3/4"	White	2 ea.
12101-203	Misc.	5"	White	2 ea.
12101-701	Universal	10-1/4"	Black	3 ea.
12101-702	Telco	7-3/4"	Black	2 ea.
12101-703	Misc.	5"	Black	2 ea.

No Exception Taken
MDA, Inc
Gary Adovnik
Checking is only for general conformance with the design concept of the project and general compliance with the information given in the contract documents. Any action shown is subject to the requirements of the plans and specifications. Contractor is responsible for: Dimensions, which shall be confirmed and correlated at the job site; fabrication processes and techniques of construction; coordination of his work with that of all other trades; and the satisfactory performance of his work.
06/15/2021

Verify color preference with architect or/and district

©2001 Chatsworth Products, Inc. 11/02, REV. 2/05

Product Cut Sheet

TRIANGULAR SUPPORT BRACKET, STEEL

Triangular Support Bracket provides wall support for cable runway. Made of cold rolled steel. Load rating is 400 lb (181.4 kg).

Kit consists of:

- (1) vertical wall-mounting bracket
- (1) runway support channel
- (1) angle support channel
- (3) clevis pins (5/16" diameter) & cotter pins
- (2) 5/16-18 x 2 1/4" J-bolts
- (2) 5/16-18 hex nuts & 5/16 lock washers

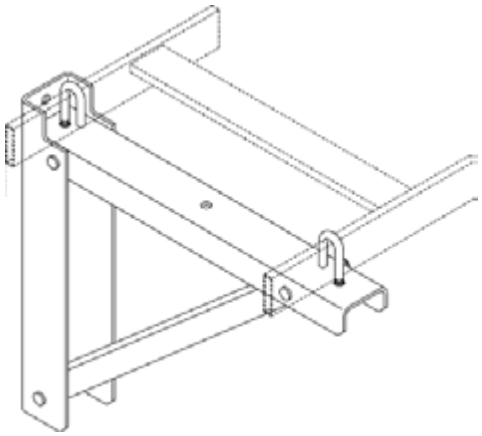

Part Number	Runway Widths in (mm)	Shipping Weight lb (kg)
11746-X12	6, 12 (150, 300)	5 (2.3)
11746-X18	18 (460)	8 (3.6)
11746-X24	24 (610)	9 (4.1)

X=color: 0=Gold, 1=Gray, 2=Computer Beige, 7=Black, E=Glacier White. Kits have gold colored hardware. Gray (-1) and Black (-7) kits have black colored hardware.

No Exception Taken
MFIA, Inc
Gary Adovnik
Checking is only for general conformance with the design concept of the project and general compliance with the information given in the contract documents. Any action shown is subject to the requirements of the plans and specifications. Contractor is responsible for: Dimensions, which shall be confirmed and correlated at the job site; fabrication processes and techniques of construction; coordination of his work with that of all other trades; and the satisfactory performance of his work.

06/15/2021

Verify color preference with architect or/and district

CHATSWORTH PRODUCTS

©2013 Chatsworth Products, Inc. All rights reserved. CPI, CPI Passive Cooling, GlobalFrame, MegaFrame, Saf-T-Grip, Seismic Frame, SlimFrame, TeraFrame, Cube-iT Plus, Evolution, OnTrac, Velocity and QuadraRack are federally registered trademarks of Chatsworth Products. eConnect and Simply Efficient are trademarks of Chatsworth Products. All other trademarks belong to their respective companies. 6/13

Product Information Sheet

WALL ANGLE SUPPORT KIT

2" x 2" x .105" (50 mm x 50 mm x 2.67 mm) steel support angle is designed for wall mounting specific widths of Cable Runway.

- Kit consists of:
  - 1 each wall angle
  - 2 each 5/16-18 x 2 1/4" J-bolts
  - 2 each 5/16-18 hex nuts
  - 2 each 5/16 lock washers

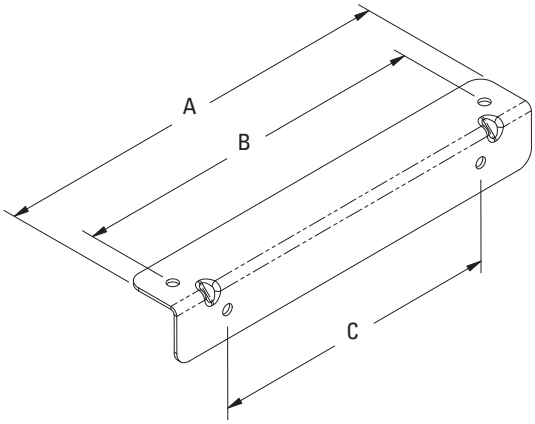

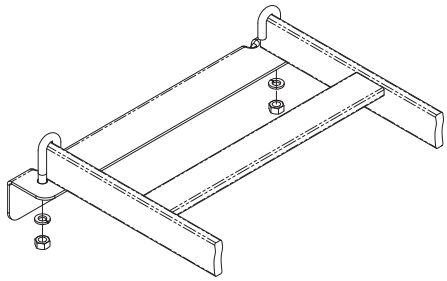

11421	Wall Angle Support Kit

Color	
1	Gray
2	Computer White
7	Black
0	Gold

	Runway Width	Dim. A	Dim. B	Dim. C
04	4" (100 mm)	6" (150 mm)	4.31" (109.5 mm)	4.31" (109.5 mm)
06	6" (150 mm)	8" (200 mm)	6.31" (160.3 mm)	4" (100 mm)
09	9" (230 mm)	11" (280 mm)	9.31" (236.5 mm)	7" (180 mm)
10	10" (250 mm)	12" (300 mm)	10.31" (261.9 mm)	8" (200 mm)
12	12" (300 mm)	14" (360 mm)	12.31" (312.7 mm)	10" (250 mm)
15	15" (380 mm)	17" (430 mm)	15.31" (388.9 mm)	13" (330 mm)
18	18" (460 mm)	20" (510 mm)	18.31" (465.1 mm)	16" (410 mm)
20	20" (510 mm)	22" (560 mm)	20.31" (515.9 mm)	18" (457 mm)
24	24" (610 mm)	26" (660 mm)	24.31" (617.5 mm)	22" (558 mm)
30	30" (760 mm)	32" (810 mm)	30.31" (769.9 mm)	28" (710 mm)

11421	-	X	XX

Note: Gray and black kits include black J-Bolts and hardware. White and gold kits include gold J-Bolts and hardware.

No Exception Taken
MFIA, Inc
Gary Adovnik
Checking is only for general conformance with the design concept of the project and general compliance with the information given in the contract documents. Any action shown is subject to the requirements of the plans and specifications. Contractor is responsible for: Dimensions, which shall be confirmed and correlated at the job site; fabrication processes and techniques of construction; coordination of his work with that of all other trades; and the satisfactory performance of his work.

06/15/2021

Verify color preference with architect or/and district

CHATSWORTH PRODUCTS, INC.

©2009 Chatsworth Products, Inc. All rights reserved. CPI, CPI Passive Cooling, Saf-T-Grip, Seismic Frame, SlimFrame and MegaFrame are federally registered trademarks of Chatsworth Products, Inc. Cube-iT Plus, Evolution, OnTrac, QuadraRack, Simply Efficient and TeraFrame are trademarks of Chatsworth Products, Inc. All other trademarks belong to their respective companies. 09/09

Product Cut Sheet

RACK SEISMIC GUSSET KIT

Gusset kit can be added to any CPI Universal rack to stiffen critical load-supporting joints. Whenever possible the top of the rack should be stabilized using CPI Bracing Kit (P/N 10562-001).

- Adds additional support to critical rack joints
- Kit can be added to any CPI universal (46XXX series) rack

Gusset kit includes:
4 each welded steel bolt-on gussets
8 each 1/2-13 x 1-1/4" bolts
8 each 1/2-13 nuts

NOTE: Seismic installation requirements should be approved by a licensed structural engineer.

Part Number	Color	Shipping Weight
11592-101	Gusset Kit, Gray	10 lb
11592-201	Gusset Kit, White	10 lb
11592-701	Gusset Kit, Black	10 lb

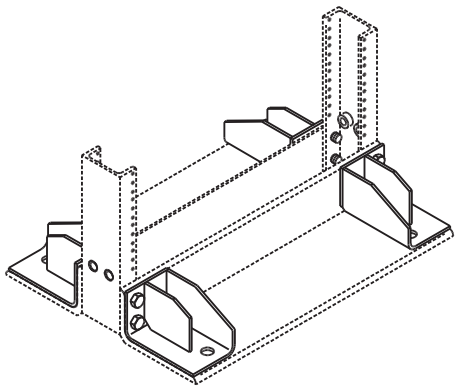

No Exception Taken
MFIA, Inc
Gary Adovnik
Checking is only for general conformance with the design concept of the project and general compliance with the information given in the contract documents. Any action shown is subject to the requirements of the plans and specifications. Contractor is responsible for: Dimensions, which shall be confirmed and correlated at the job site; fabrication processes and techniques of construction; coordination of his work with that of all other trades; and the satisfactory performance of his work.

06/15/2021

Verify color preference with architect or/and district

CHATSWORTH PRODUCTS, INC.

©2010 Chatsworth Products, Inc. All rights reserved. CPI, CPI Passive Cooling, MegaFrame, Saf-T-Grip, Seismic Frame, SlimFrame, TeraFrame, Cube-iT Plus, Evolution, OnTrac, and QuadraRack are federally registered trademarks of Chatsworth Products, Inc. GlobalFrame, Simply Efficient and Velocity are trademarks of Chatsworth Products, Inc. All other trademarks belong to their respective companies. 12/10

ALTOS® All-Dielectric Gel-Free Cables

CORNING

Features and Benefits

Fully waterblocked loose tube gel-free design
Simple access and no clean up

Medium-density polyethylene jacket
Rugged, durable and easy to strip while providing superior protection against UV radiation, fungus, abrasion and other environmental factors

All-dielectric cable construction
Requires no grounding or bonding

Available in 62.5 µm, 50 µm, single-mode (including bend-insensitive and non-zero dispersion shifted fiber (NZ-DSF) options) and hybrid versions
Ready for any application including Gigabit Ethernet and 10 Gigabit Ethernet

Corning Cable Systems ALTOS® All-Dielectric Gel-Free Cables are designed for outdoor and limited indoor use for campus backbones in lashed aerial and duct installations. The loose tube gel-free design is fully waterblocked using craft-friendly, water-swellable materials, which means cable access is simple and no clean up is required. The flexible craft-friendly buffer tubes are easy to route in closures and the SZ-stranded, loose tube design isolates fibers from installation and environmental rigors while allowing easy midspan access. The all-dielectric cable construction requires no bonding or grounding and these cables have a medium-density polyethylene jacket that is rugged, durable and easy to strip.

Revise and Resubmit
Gary Adovnik, MFIA Inc.
Does not match specification
or district standards
06/15/2021

Standards

Common Installations	Outdoor lashed aerial and duct; indoor when installed according to National Electrical Code® (NEC®) Article 770
Design and Test Criteria	ANSI/ICEA S-87-640 Telcordia GR-20 RDUP PE-90 listed

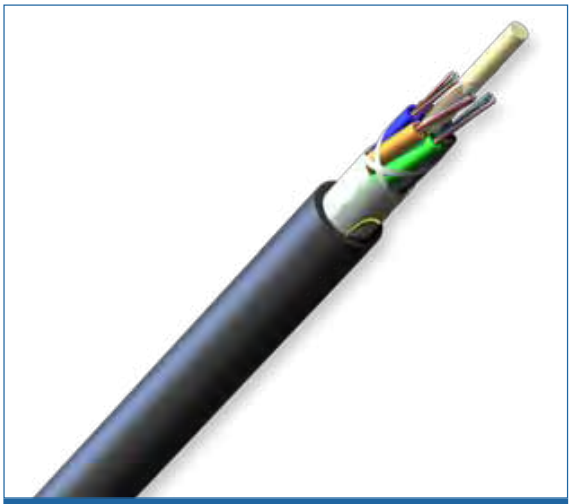

ALTOS® All-Dielectric, Gel-Free Cables, 36-Fibers

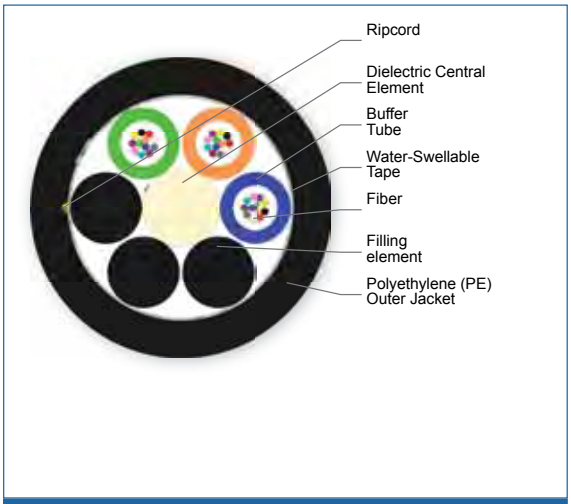

ALTOS® All-Dielectric, Gel-Free Cables, 36-Fibers

CORNING

ALTOS® All-Dielectric Gel-Free Cables

CORNING

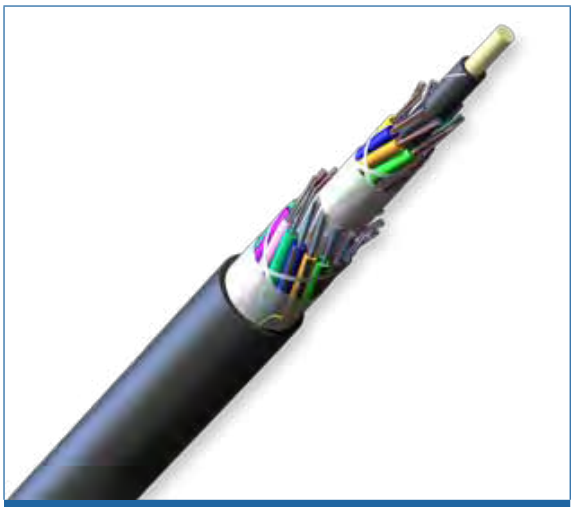

ALTOS® All-Dielectric, Gel-Free Cables, 288-Fibers

ALTOS® All-Dielectric, Gel-Free Cables, 288-Fibers

Specifications

Temperature Range	
Storage	-40 °C to 70 °C (-40 °F to 158 °F)
Installation	-30 °C to 70 °C (-22 °F to 158 °F)
Operation	-40 °C to 70 °C (-40 °F to 158 °F)

** Corning Cable Systems recommends storing cable in a proper temperature environment prior to installation to allow the cable temperature to meet installation temperature range specifications for best installation results.*

Mechanical Characteristics Cable	
Max. Tensile Strengths, Short-Term	2700 N (600 lbf)
Max. Tensile Strengths, Long-Term	890 N (200 lbf)

Fiber Count	Product Type	Maxi-mum Fibers per Tube	Number of Tube Posi-tions	Number of Active Tubes	Weight	Nominal Outer Diam-eter	Min. Bend Radius Installation	Min. Bend Radius Operation
2 - 72	Dielectric	12	6	1 - 6	73 kg/km (49 lb/1000 ft)	10.5 mm (0.41 in)	158 mm (6.2 in)	105 mm (4.1 in)
84 - 96	Dielectric	12	8	7 - 8	98 kg/km (66 lb/1000 ft)	12.2 mm (0.48 in)	183 mm (7.2 in)	122 mm (4.8 in)
108 - 144	Dielectric	12	12	9 - 12	162 kg/km (109 lb/1000 ft)	15.8 mm (0.62 in)	237 mm (9.3 in)	158 mm (6.2 in)

ALTOS® All-Dielectric Gel-Free Cables

CORNING

Fiber Count	Product Type	Maxi-mum Fibers per Tube	Number of Tube Posi-tions	Number of Active Tubes	Weight	Nominal Outer Diam-eter	Min. Bend Radius Installation	Min. Bend Radius Operation
156 - 216	Dielectric	12	18	13 - 18	147 kg/km (99 lb/1000 ft)	16 mm (0.63 in)	240 mm (9.4 in)	160 mm (6.3 in)
228 - 288	Dielectric	12	24	19 - 24	196 kg/km (131 lb/1000 ft)	18.2 mm (0.72 in)	273 mm (10.7 in)	182 mm (7.2 in)

Chemical Characteristics	
RoHS	Free of hazardous substances according to RoHS 2002/95/EG

Transmission Performance

Fiber Type Fiber Core Diameter (µm)	Multimode 62.5	Multimode 50	Multimode 50	Multimode 50	Single-mode 8.2	Single-mode 8.2
Fiber Category	OM1	OM2	OM3	OM4	OS2	OS2
Fiber Code	K	T	T	T	E	E
Performance Option Code	30	31	80	90	01	00
Wavelengths (nm)	850 / 1300	850 / 1300	850 / 1300	850 / 1300	1310 / 1383 / 1550	1310 / 1383 / 1550
Maximum Attenuation (dB/km)	3.4 / 1.0	3.0 / 1.0	3.0 / 1.0	3.0 / 1.0	0.4 / 0.4 / 0.3	0.35 / 0.35 / 0.25
Serial 1 Gigabit Ethernet (m)	300 / 550	750 / 600	1000 / 600	1100 / 600	5000 / - / -	5000 / - / -
Serial 10 Gigabit Ethernet (m)	33 / -	150 / -	300 / -	550 / -	10000 / - / 40000	10000 / - / 40000
Min. Overfilled Launch (OFL) Bandwidth (MHz*km)	200 / 500	700 / 500	1500 / 500	3500 / 500		
Minimum Effective Modal Bandwidth (EMB) (MHz*km)	220 / -	950 / -	2000 / -	4700 / -		

** Single-mode (OS2) fiber is ITU-T G.652.D compliant.*
** OM4 Multimode fiber 10 Gigabit Ethernet distance assumes 1.0 dB maximum total connector/splice loss.*

Notes:
1) *Improved attenuation and bandwidth options available.*
2) *Bend-insensitive single-mode fibers available on request.*
3) *Contact a Corning Cable Systems Customer Care Representative for additional information.*
4) *50 µm multimode fiber macrobend loss ≤ 0.2 dB at 850 nm for two turns around 7.5 mm radius mandrel.*

ALTOS® All-Dielectric Gel-Free Cables

CORNING

Ordering Information | Contact Customer Care at 1-800-743-2671 for other options.

☐ ☐ ☐	☐	U	4	-	T	☐	1	☐ ☐	D	2 0
1	2	3	4		5	6	7	8	9	10

1 Select fiber count.
Standard offerings:
002 - 288

2 Select fiber code.
K = 62.5 µm multimode, OM1
T = 50 µm multimode, OM2
E = Single-mode, OS2 SMF-28e+®

3 Defines cable type.
U = ALTOS® Loose Tube Cable with 2.5 mm buffer tubes

4 Defines outer jacket.
4 = All-Dielectric

5 Defines fiber placement.
T = 12 fibers/buffer tube (standard)

6 Select length markings.
3 = Markings in meters
4 = Markings in feet (standard)

7 Defines tensile strength.
1 = 2700 N/600 lbf (standard)

8 Select performance option code.
30 = 62.5 µm multimode, OM1
31 = 50 µm multimode, OM2
80 = 50 µm multimode,OM3
90 = 50 µm multimode,OM4
01 = Single-mode, OS2
(Max. attenuation 0.4/0.4/0.3 dB/km)
00 = Single-mode, OS2
(Max. attenuation 0.35/0.35/0.25 dB/km)

9 Defines cable type.
D = Gel-Free Cable

10 Defines special requirements.
20 = No special requirements

RoHS COMPLIANT

Corning Cable Systems LLC • PO Box 489 • Hickory, NC 28603-0489 USA
800-743-2675 • FAX: 828-325-5060 • International: +1-828-901-5000 • www.corning.com/cablesystems
A complete listing of the trademarks of Corning Cable Systems is available at www.corning.com/cablesystems/trademarks.
Corning Cable Systems is ISO 9001 certified. © 2012 Corning Cable Systems. All rights reserved.

Contact
Copper LAN Product Inquiry
Phone: 717-354-6200
berktek.support@nexans.com

LANmark-6 Riser Rated

The NEW Berk-Tek LANmark-6 features a reduced diameter compared to other category 6 UTP cables. This is an ANSI/TIA/EIA category 6 verified cable, constructed without the center spline for easy installation and termination. LANmark-6 is capable of transmitting applications such as 1000BASE-T. It is ideal for network applications that extend to 250 MHz. LANmark-6 is available in both CMP and CMR and conforms to ANSI/TIA/EIA 568-B.2-1 Category 6 and ISO/IEC 11801 2nd Edition Class E Category 6 requirements.

Description

Berk-Tek LANmark-6 UTP, Performance Guaranteed

Before any cable can display the **Berk-Tek LANmark-6 UTP** legend, it must pass factory tests with ***a minimum of 2dB of crosstalk margin beyond the CAT 6 standard for NEXT, PSNEXT, ACR and PSACR.*** If the margin is missing, so is the legend. That is our guarantee to you.

Your business demands continuous performance from your IT network, so our specifications aren't simply numbers on the page. They define the way that we do business. This means that you are ***guaranteed*** industry-leading performance and quality for all Berk-Tek products.

Some other manufacturers talk about "typical" values, at Berk-Tek, we hold ourselves to a higher standard. We won't talk about typicals, we talk about what is true, guaranteed, and independently verified.

Keep your business running by relying on Berk-Tek.

Perform Beyond Expectations... Choose Berk-Tek.

Construction: 23 AWG bare copper wire insulated with high density polyethylene. Two insulated conductors twisted together to form a pair and four such pairs cabled to form the basic unit, jacketed with flame-retardant PVC.

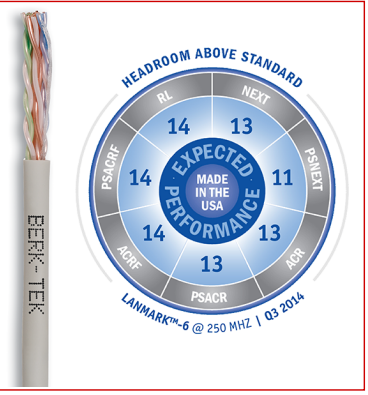

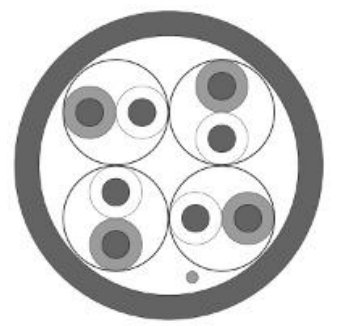

Flame Rating: Riser - NFPA 70, CMR

Features

- Inexpensive compact design
- Meets the requirements of ANSI/TIA/EIA-568-C.2
- Usable bandwidth up to 250 MHz
- Delivered in compact, strong, easy to identify boxes
- RoHS Compliant

Benefits

- Provides Category 6 performance
- Cost effective entry level category 6 solution
- Provides additional usable bandwidth required for future applications
- Superior box design allows cable to be pulled easily from the box with minimum kinking
- Compact box design takes up less shelf space.
- Clearly identified packaging eliminates potential confusion

Standards

International ISO/IEC 11801

National ANSI/TIA-568-C.2; UL 444

All drawings, designs, specifications, plans and particulars of weights, size and dimensions contained in the technical or commercial documentation of Nexans is indicative only and shall not be binding on Nexans or be treated as constituting a representation on the part of Nexans.

Contact
Copper LAN Product Inquiry
Phone: 717-354-6200
berktek.support@nexans.com

LANmark-6 Riser Rated

Characteristics

Construction characteristics	
Type of cable	UTP
Dimensional characteristics	
Number of pairs	4
Usage characteristics	
Field of application	Indoor
Category	Cat. 6
Fire safety	CMR - Riser Rated

Product List

📞=Make to order, 🚚=In stock

	Part Number	Description	Colour	Length per reel (ft)	Packaging
🚚	10136341	LANmark-6 UTP Riser	Grey	1000.0	Reel
🚚	10136338	LANmark-6 UTP Riser	Grey	1000.0	Box
🚚	10136342	LANmark-6 UTP Riser	Blue	1000.0	Reel
🚚	10136339	LANmark-6 UTP Riser	Blue	1000.0	Box
🚚	10136343	LANmark-6 UTP Riser	White	1000.0	Reel
🚚	10136340	LANmark-6 UTP Riser	White	1000.0	Box
🚚	10136775	LANmark-6 UTP Riser	Yellow	1000.0	Reel
🚚	10136753	LANmark-6 UTP Riser	Yellow	1000.0	Box
📞	10170932	LANmark-6 UTP Riser	Black	1000.0	Box
🚚	10136774	LANmark-6 UTP Riser	Green	1000.0	Reel
🚚	10136752	LANmark-6 UTP Riser	Green	1000.0	Box
📞	10170931	LANmark-6 UTP Riser	Red	1000.0	Box
📞	10189773	LANmark-6 UTP Riser	Orange	1000.0	Box
📞	11058425	LANmark-6 UTP Riser	Pink	1000.0	Box
📞	11072302	LANmark-6 UTP Riser	Violet	1000.0	Box
🚚	11074703	LANmark-6 UTP Riser 1500 ft. smartPAK	Blue	1500.0	Box
🚚	11074744	LANmark-6 UTP Riser 1500 ft. smartPAK	White	1500.0	Box
🚚	11074745	LANmark-6 UTP Riser 1500 ft. smartPAK	Grey	1500.0	Box

📞 = Make to order, 🚚 = In stock

No Exception Taken
MFIA, Inc
Gary Adovnik
Checking is only for general conformance with the design concept of the project and general compliance with the information given in the contract documents. Any action shown is subject to the requirements of the plans and specifications. Contractor is responsible for: Dimensions, which shall be confirmed and correlated at the job site; fabrication processes and techniques of construction; coordination of his work with that of all other trades; and the satisfactory performance of his work.

06/15/2021

All drawings, designs, specifications, plans and particulars of weights, size and dimensions contained in the technical or commercial documentation of Nexans is indicative only and shall not be binding on Nexans or be treated as constituting a representation on the part of Nexans.

Berk-Tek®
A NEXANS COMPANY

Contact
Copper LAN Product Inquiry
Phone: 717-354-6200
berktek.support@nexans.com

LANmark-6 Riser Rated

LANmark-6 Parametric Data: Electrical

FQ = Frequency (MHz) / TIA = TIA Spec / PG = Product Guarantee

	RL (dB)	NEXT (dB)	PSNEXT (dB)	ACRF (dB)	LCL/TCL
FQ	TIA / PG	TIA / PG	TIA / PG	TIA / PG	PG
1	20.00 / 20.00	74.30 / 76.30	72.30 / 74.30	67.80 / 67.80	40.00
4	23.00 / 23.00	65.30 / 67.30	63.30 / 65.30	55.80 / 55.80	40.00
10	25.00 / 25.00	59.30 / 61.30	57.30 / 59.30	47.80 / 47.80	40.00
16	25.00 / 25.00	56.20 / 58.30	54.20 / 56.30	43.70 / 43.70	38.00
20	25.00 / 25.00	54.80 / 56.80	41.80 / 54.80	41.80 / 41.80	37.00
31.25	23.60 / 23.60	51.90 / 53.90	49.90 / 51.90	37.90 / 37.90	35.10
62.5	21.50 / 21.50	47.40 / 49.40	45.40 / 47.40	31.90 / 31.90	32.00
100	20.10 / 20.10	44.30 / 46.30	42.30 / 44.30	27.80 / 27.80	30.00
150	18.90 / 18.90	41.70 / 43.70	39.70 / 41.70	24.30 / 24.30	28.20
200	18.00 / 18.00	39.80 / 41.80	37.80 / 39.80	21.80 / 21.70	27.00
250	17.30 / 17.30	38.30 / 40.30	36.30 / 38.30	19.80 / 19.80	26.00
300	— / 16.80*	— / 39.10*	— / 37.10*	— / 18.30*	25.20
350	— / 16.30*	— / 38.20*	— / 36.20*	— / 16.90*	24.60*
400	— / 15.90*	— / 37.30*	— / 35.30*	— / 15.80*	24.00*
450	— / 15.50*	— / 36.50*	— / 34.50*	— / 14.70*	23.50*
500	— / 15.20*	— / 35.80*	— / 33.80*	— / 13.80*	23.00*

	IL (dB/100 m)	ACR (dB/100 m)	PSACR (dB/100 m)	PSACRF (dB/100 m)	EL TCTL
FQ	TIA / PG	TIA / PG	TIA / PG	TIA / PG	PG
1	2.00 / 2.00	72.20 / 74.30	70.30 / 72.30	64.80 / 64.80	35.00
4	3.80 / 3.80	61.50 / 63.50	59.50 / 61.50	52.80 / 52.80	23.00
10	6.00 / 6.00	53.40 / 55.40	51.30 / 53.40	44.80 / 44.80	15.00
16	7.60 / 7.60	48.80 / 50.70	46.70 / 48.70	40.70 / 40.70	10.90
20	8.50 / 8.50	46.40 / 48.40	44.30 / 46.40	38.80 / 38.80	9.00
31.25	10.70 / 10.70	41.40 / 43.30	39.20 / 41.30	37.90 / 34.90	—
62.50	15.40 / 15.40	32.40 / 34.00	30.00 / 32.00	28.90 / 28.90	—
100	19.80 / 19.80	25.20 / 26.60	22.50 / 24.60	24.80 / 24.80	—
150	24.70 / 24.60	16.90 / 19.10	14.90 / 17.10	21.30 / 21.30	—
200	29.00 / 29.00	10.80 / 12.90	8.80 / 10.90	18.80 / 18.70	—
250	32.80 / 32.80	7.30 / 7.50	3.50 / 5.50	16.80 / 16.80	—
300	— / 36.40*	— / 2.70*	— / —	— / 15.30*	—
350	— / 39.80*	— / -1.60*	— / —	13.90 / 13.90*	—
400	— / 43.00*	— / -5.70*	— / —	12.80 / 12.80*	—
450	— / 46.00*	— / -9.50*	— / —	— / 11.70*	—
500	— / 48.90*	— / -13.10*	— / —	10.80 / 10.80*	—

*Values provided for reference only

LANmark-6 Riser UTP Physical Data

Technical Data - Physical		
Conductor	23 AWG Bare Copper	
Conductor diameter - in. (mm)	0.022	(0.56)
Insulated conductor dia.-in.(mm)	0.039	(0.99)
Cable diameter - in. (mm)	0.21	(5.33)
Nom. cable wt.-lb./kft. (kg/kft)	22	(9.98)
Max. installation tension - lb. (N)	25	(110)
Min. bend radius - in. (mm)	1.00	(25.40)

Color Code		
Pair-1	White/Blue	Blue
Pair-2	White/Orange	Orange
Pair-3	White/Green	Green
Pair-4	White/Brown	Brown

Temperature Rating (degrees C)	
Installation	0 to +50
Operation	-20 to +75

All drawings, designs, specifications, plans and particulars of weights, size and dimensions contained in the technical or commercial documentation of Nexans is indicative only and shall not be binding on Nexans or be treated as constituting a representation on the part of Nexans.

Contact
Copper LAN Product Inquiry
Phone: 717-354-6200
berktek.support@nexans.com

LANmark-6 Riser Rated

LANmark-6 Riser Technical Data - Parametric Measurements

Mutual Capacitance	5.1 nF/100 m max.	**Pair to Ground Unbalance**	330 pF/100 m max.
DC Resistance	9.38 Ohms/100 m max.	**Velocity of Propagation**	69% nom.
Skew	45 ns/100 m max.	**DC Resistance unbalance**	5% max.

Supported Category 6 Applications

STANDARD	APPLICATION	SPEED
IEEE 802.3	1000BASE-T	1 Gb/s
TIA/EIA-854	1000BASE-TX	1 Gb/s
ATM	155Mb/s	155 Mb/s
IEEE 802.3	100BASE-TX	100 Mb/s
CDDI		100 Mb/s
IEEE 802.3	10BASE-T	10 Mb/s
IEEE 802.3 af	PoE	1 Gb/s
IEEE 802.3 at	PoE+, Type 1 & 2	1 Gb/s

LANmark-6 UTP Riser Jacket Legend

BERK-TEK LANMARK-6 23 AWG CMR 75C C(UL)US ETL VERIFIED TIA-568-C.2 CAT 6 [ANY APPLICABLE PATENTS] [DATECODE] [SEQ#] FT

Selling information

PLEASE NOTE: In the interest of product improvement, Berk-Tek, a Nexans company may make improvements or changes in the products, the programs or services described at any time without notice. Additionally, the information contained herein may include typographical errors or technical inaccuracies. Changes will be periodically made to address any such issues.

All drawings, designs, specifications, plans and particulars of weights, size and dimensions contained in the technical or commercial documentation of Nexans is indicative only and shall not be binding on Nexans or be treated as constituting a representation on the part of Nexans.

Anaerobic-Cure Connectors

A LANscape® Solutions Product

features and benefits |

Quick-cure epoxy	No lamps or ovens needed
Minimal tools and no index matching gel	Low installation cost
Hand polished for minimum insertion loss	Reliability and optical performance

Revise and Resubmit
Gary Adovnik, MFIA Inc.
06/24/2021

District standards require fusion spliced connectors.

Corning Cable Systems Anaerobic-Cure Connectors offer optical performance in a fast, easy field-termination solution designed for fiber-to-the-workstation applications for single-mode and multimode connections. This connector combines the quick-cure convenience of anaerobic adhesive with the performance of epoxy and polish connectors. Ideal for enterprise networks and any installations requiring field-installed connectors, the anaerobic cure technology enables fiber optic networks to be installed cost effectively with minimal tools. Installation of the connector can be accomplished in minutes with the anaerobic adhesive two-part epoxy process. The adhesive is first injected into the connector ferrule and then the fiber is dipped into the primer and inserted into the connector. Curing takes only one minute without the use of lamps or ovens. With the hand-polish process, an average insertion loss of 0.2 dB is achieved.

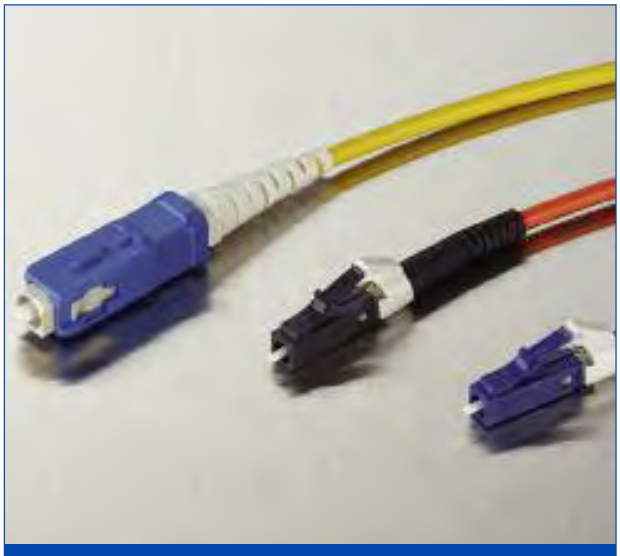

Anaerobic-Cure Connectors | Photo LAN611

TKT-ANAEROBIC2 Installation Tool Kit | Photo LAN395

CORNING | LANscape® Solutions

Anaerobic-Cure Connectors

A LANscape® Solutions Product

specifications |

Intermateability	Compliant with TIA/EIA 604-2 (ST® Compatible Connector), 604-3 (SC), 604-4 (FC) and 604-10 (LC)

	Multimode	**Single-mode**
Insertion Loss	0.2 dB average 0.75 dB maximum	0.2 dB average 0.75 dB maximum
Reflectance	≤ -26 dB	≤ -40 dB
Temperature Cycling	≤ 0.3 dB change, -40º to +75ºC; 21 cycles	same

ordering information |

Part Number	Description
Multimode	
95-051-52-SP	ST Compatible 50 µm Multimode Connector with ceramic ferrule and metal hardware; single pack
95-051-52-SP-X	ST Compatible 50 µm LOMMF* Connector with ceramic ferrule and metal hardware; single pack
95-101-52-SP	ST Compatible 62.5 µm Multimode Connector with ceramic ferrule and metal hardware; single pack
95-051-41-SP	SC 50 µm Multimode Connector with ceramic ferrule; single pack
95-051-41-SP-X	SC 50 µm LOMMF* Connector with ceramic ferrule; single pack
95-101-41-SP	SC 62.5 µm Multimode Connector with ceramic ferrule; single pack
95-051-61-SP	FC 50 µm Multimode Connector with ceramic ferrule; single pack
95-051-61-SP-X	FC 50 µm LOMMF* Connector with ceramic ferrule; single pack
95-101-61-SP	FC 62.5 µm Multimode Connector with ceramic ferrule; single pack
95-051-98-SP	LC 50 µm Multimode Connector with ceramic ferrule; single pack
95-051-98-SP-X	LC 50 µm LOMMF* Connector with ceramic ferrule; single pack
95-101-98-SP	LC 62.5 µm Multimode Connector with ceramic ferrule; single pack

* *LOMMF = Laser-optimized multimode fiber.*

Anaerobic-Cure Connectors

A LANscape® Solutions Product

ordering information | (continued)

Part Number	Description
Single-mode	
95-201-52-SP	ST® Compatible Single-mode Connector with ceramic ferrule and metal hardware; single pack
95-201-41-SP	SC Single-mode Connector with ceramic ferrule and composite hardware; single pack
95-201-61-SP	FC Single-mode Connector with ceramic ferrule and composite hardware; single pack
95-201-98-SP	LC Single-mode Connector with ceramic ferrule and composite hardware; single pack
Boot Color	
All SC, FC and ST® Compatible Connectors come with 3 mm, 2 mm and 900 µm boots. LC connectors come with 3 mm, 900 µm and combination 2 mm/1.6 mm boots.	
50 µm	Black only
Laser-optimized multimode fiber	Aqua only
62.5 µm	Beige
Single-mode	Blue
Accessories	
TKT-ANAEROBIC2	Installation Kit for Anaerobic-Cure and Anaerobic-Cure Glass-Insert Connectors; includes consumables for 500 connectors
TKT-ANAEROBIC2-C	Anaerobic-Cure and Anaerobic-Cure GIC Consumables Kit; includes adhesive and polishing papers for 500 connectors
3201031-01	Jacket Retention Crimp Tool for SC, FC and ST Compatible Connectors
3201032-01	LC Crimp Tool
2104459-01	LC Polishing Puck
2104020-01	Universal Polishing Puck
1101045-01	Anaerobic Adhesive, Primer and Syringe Tips
CLEANER-UNIV-CASS	Universal Connector Cleaning Cassette
TRIGGER-BP-D	LC/MU Duplex Trigger
95-400-03-BP	SC Duplex Clip

notes |

Corning Cable Systems LLC • PO Box 489 • Hickory, NC 28603-0489 USA
800-743-2675 • FAX: 828-901-5973 • International: +1-828-901-5000 • www.corning.com/cablesystems

Corning Cable Systems reserves the right to improve, enhance and modify the features and specifications of Corning Cable Systems products without prior notification. LANscape is a registered trademark of Corning Cable Systems Brands, Inc. ST is a registered trademark of Lucent Technologies. All other trademarks are the properties of their respective owners. Corning Cable Systems is ISO 9001 certified. © 2005, 2009 Corning Cable Systems. All rights reserved. Published in the USA. LAN-460-EN / April 2009

Contact
Copper LAN Product Inquiry
Phone: 717-354-6200
copper-pc.us@nexans.com

LANmark-1000 Category 6 Riser

LANmark-1000 has been improved to offer best-in-class electrical performance. Berk-Tek's engineers completely redesigned LANmark-1000 so that all crosstalk parameters could be improved by four dB. As a result, the Power Sum Attenuation to Crosstalk ratio (PSACR) is nearly 3 times better (at 250 MHz) allowing for much greater signal strength and less vulnerability to noise interference. At Berk-Tek, we understand that your business runs through us.

Description

Construction

23 AWG bare copper wire insulated with polyethylene. Two insulated conductors twisted together to form a pair and four such pairs laid up with crossfiller to form the basic unit, jacketed with flame-retardant PVC.

Standards

North American: ANSI/TIA/EIA-568-B.2-1 Category 6, UL 444 and C22.2 No. 214-02

International: ISO/IEC 11801-2nd Edition Category 6, EU Directive 2002/95/EC (RoHS)

Flame Rating

Riser - UL 1666, CMR, IEC 332-1, UL Listed

Applications

Berk-Tek's LANmark-1000 UTP cable is intended for high speed data applications including:

- IEEE 802.3 1000BASE-T 1 Gb/s
- TIA/EIA-854 1000BASE-TX 1 Gb/s
- ATM 155 Mb/s 155 Mb/s
- IEEE 802.3 100BASE-TX 100 Mb/s
- CDDI 100 Mb/s
- IEEE 802.3 10BASE-T 10 Mb/s

Features

- Full Power Sum Performance
- Documented balance characteristics (LCL, LCTL)
- ETL verified to ANSI/TIA/EIA-568-B.2-1 Category 6 standard

Benefits

- Optimal support for Gigabit Ethernet with headroom
- Power sum characterization gives highest performance using existing applications
- Provides additional bandwidth required for future applications
- Addition of balance requirements improves overall cable performance and reduces cable emissions which results in reduced transmission errors
- Characterized to 550 MHz, 300 MHz greater than the standard

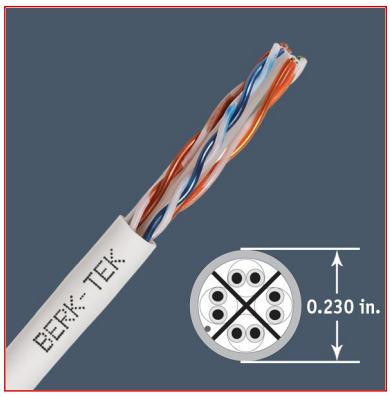

Standards
National TIA/EIA-568-B.2

No Exception Taken
MFIA, Inc
Gary Adovnik
Checking is only for general conformance with the design concept of the project and general compliance with the information given in the contract documents. Any action shown is subject to the requirements of the plans and specifications. Contractor is responsible for: Dimensions, which shall be confirmed and correlated at the job site; fabrication processes and techniques of construction; coordination of his work with that of all other trades; and the satisfactory performance of his work.

06/15/2021

All drawings, designs, specifications, plans and particulars of weights, size and dimensions contained in the technical or commercial documentation of Nexans is indicative only and shall not be binding on Nexans or be treated as constituting a representation on the part of Nexans.

Contact
Copper LAN Product Inquiry
Phone: 717-354-6200
copper-pc.us@nexans.com

LANmark-1000 Category 6 Riser

Characteristics

Construction characteristics	
Type of cable	UTP
Dimensional characteristics	
Length per reel	1000.0 ft
Number of pairs	4
Usage characteristics	
Field of application	Indoor
Category	Cat. 6

Technical Data - Physical

Technical Data - Physical		
Conductor	23 AWG Bare Copper	
Conductor diameter–in. (mm)	0.022	(0.56)
Insulated Conductor Diameter- in. (mm)	0.039	(0.99)
Cable diameter–in. (mm)	0.228	(5.8)
Nominal cable weight–lb./kft. (kg/km)	25	(38.2)
Max. installation tension–lb. (N)	25	(110)
Min. bend radius–in. (mm)	1	(25.4)

Color Code		
Pair-1	**White/Blue**	**Blue**
Pair-2	**White/Orange**	**Orange**
Pair-3	**White/Green**	**Green**
Pair-4	**White/Brown**	**Brown**

Temperature Rating	
Installation	0°C to +50°C
Operation	-20°C to +75°C

Parametric Measurements

Mutual Capacitance	4.4 nF/100 m nom.
DC resistance	9.38 Ohms/100 m max.
Skew	35 ns/100 m max.
Pair to ground Unbalance	330 pF/100 m max.
Velocity of Propagation	69% nom.
Input Impedance	100 ± 13% 0.772-100 MHz 100 ± [13 +15log (F/100)] 100-350 MHz

All drawings, designs, specifications, plans and particulars of weights, size and dimensions contained in the technical or commercial documentation of Nexans is indicative only and shall not be binding on Nexans or be treated as constituting a representation on the part of Nexans.

Contact
Copper LAN Product Inquiry
Phone: 717-354-6200
copper-pc.us@nexans.com

LANmark-1000 Category 6 Riser

Technical Data - Electrical

FREQ MHz	SRL (dB)		RL (dB)		INSERTION LOSS (dB/100m)		PS-NEXT (dB)		NEXT (dB)		ACR (dB@100m)	
	min.	typical	min.	typical	max.	typical	min.	typical	min.	typical	min.	typical
1	26.0	34.7	20.0	41.2	2.0	1.7	77.3	88.4	79.3	95.6	77.3	88.2
4	26.0	43.1	23.6	38.7	3.8	3.5	68.3	82.3	70.3	91.6	66.5	80.1
10	26.0	45.4	26.0	40.7	5.9	5.6	62.3	74.7	64.3	80.4	58.4	71.3
16	26.0	39.4	26.0	41.7	7.5	7.2	59.3	75.8	61.3	82.7	53.8	70.3
20	26.0	41.8	26.0	46.0	8.4	8.1	57.8	69.9	59.8	76.3	51.4	63.9
31.25	25.0	45.5	25.0	43.6	10.6	10.1	54.9	67.7	56.9	75.7	46.3	59.1
62.5	23.5	39.4	23.5	37.2	15.3	14.6	50.4	67.3	52.4	74.2	37.1	54.3
100	22.5	37.5	22.5	35.3	19.7	18.7	47.3	63.8	49.3	71.4	29.6	47.0
250	20.5	34.5	20.5	32.5	32.6	30.7	41.3	56.0	43.3	62.4	10.7	26.6
350	19.8	32.2	19.8	30.6	39.5	36.9	39.2	52.1	41.2	59.5	1.7	15.6
500	19.0	33.6	19.0	31.2	48.6	45.1	36.8	51.6	38.8	57.7	—	7.0
550	18.8	33.8	18.8	32.3	51.4	47.3	36.2	50.5	38.2	55.7	—	3.6

RL, SRL, IL, NEXT, PSNEXT, ELFEXT, PSELFEXT and impedance are guaranteed to 350 MHz. Data above 350 MHz is for engineering information.

Technical Data - Electrical

FREQ Mhz	PS-ACR (dB@100m)		ELFEXT (dB)		PS-ELFEXT (dB)		LCL/TCL (dB)	EL TCTL (dB)
	min.	typical	min.	typical	min.	typical	min.	min.
1	75.3	86.8	72.8	95.7	69.8	87.4	50.0	35.0
4	64.5	78.8	60.7	83.7	57.7	77.1	44.0	23.0
10	56.4	69.1	52.8	74.8	49.8	68.1	40.0	15.0
16	51.7	68.7	48.7	70.0	45.7	63.3	38.0	10.9
20	49.4	61.9	46.7	66.9	43.7	60.3	37.0	9.0
31.25	44.3	57.7	42.9	62.3	39.9	55.7	35.1	5.5
62.5	35.1	52.7	36.8	55.0	33.8	49.5	32.0	—
100	27.6	45.0	32.8	55.1	29.8	45.8	30.0	—
250	8.7	24.7	24.8	40.6	21.8	33.8	26.0	—
350	—	14.2	21.9	43.6	18.9	33.0	24.6	—
500	—	4.5	18.8	36.0	15.8	27.4	23.0	—
550	—	0.8	17.9	39.4	14.9	29.5	22.6	—

RL, SRL, IL NEXT, PSNEXT, ELFEXT, PSELFEXT and impedance are guaranteed to 350 MHz. Data above 350 MHz is provided for engineering information.

Product List

=Make to order, =Make to stock

Part Number	Description	Colour	Packaging	Fire safety
10032451	LANmark-1000 Riser	Grey	Reel	Riser Rated
10032452	LANmark-1000 Riser	Grey	Box	Riser Rated
10032454	LANmark-1000 Riser	Blue	Reel	Riser Rated

= Make to order, = Make to stock

All drawings, designs, specifications, plans and particulars of weights, size and dimensions contained in the technical or commercial documentation of Nexans is indicative only and shall not be binding on Nexans or be treated as constituting a representation on the part of Nexans.

Contact
Copper LAN Product Inquiry
Phone: 717-354-6200
copper-pc.us@nexans.com

LANmark-1000 Category 6 Riser

Part Number	Description	Colour	Packaging	Fire safety
10032455	LANmark-1000 Riser	Blue	Box	Riser Rated
10032458	LANmark-1000 Riser	White	Reel	Riser Rated
10032459	LANmark-1000 Riser	White	Box	Riser Rated
10032460	LANmark-1000 Riser	Yellow	Reel	Riser Rated
10032461	LANmark-1000 Riser	Yellow	Box	Riser Rated
10032476	LANmark-1000 Riser	Red	Reel	Riser Rated
10032477	LANmark-1000 Riser	Red	Box	Riser Rated
10032478	LANmark-1000 Riser	Green	Reel	Riser Rated
10032479	LANmark-1000 Riser	Green	Box	Riser Rated
10032501	LANmark-1000 Riser	Violet	Box	Riser Rated
10033815	LANmark-1000 Riser	Black	Box	Riser Rated
10033994	LANmark-1000 Riser	Black	Reel	Riser Rated
10035206	LANmark-1000 Riser	Cream	Box	Riser Rated
10042063	LANmark-1000 Riser	Pink	Box	Riser Rated
10042077	LANmark-1000 Riser	Orange	Box	Riser Rated
10065429	LANmark-1000 Riser	Blue	Reel in a box	Riser Rated
10065430	LANmark-1000 Riser	White	Reel in a box	Riser Rated
10065431	LANmark-1000 Riser	Grey	Reel in a box	Riser Rated
10065432	LANmark-1000 Riser	Yellow	Reel in a box	Riser Rated
10065433	LANmark-1000 Riser	Green	Reel in a box	Riser Rated
10066094	LANmark-1000 Riser	Orange	Reel in a box	Riser Rated
10066095	LANmark-1000 Riser	Black	Reel in a box	Riser Rated
10070406	LANmark-1000 Riser	Orange	Reel	Riser Rated
10095375	LANmark-1000 Riser	Violet	Reel in a box	Riser Rated

= Make to order, = Make to stock

Selling delivery information

PLEASE NOTE: In the interest of product improvement, Berk-Tek, a Nexans company may make improvements or changes in the products, the programs or services described at any time without notice. Additionally, the information contained herein may include typographical errors or technical inaccuracies. Changes will be periodically made to address any such issues.

All drawings, designs, specifications, plans and particulars of weights, size and dimensions contained in the technical or commercial documentation of Nexans is indicative only and shall not be binding on Nexans or be treated as constituting a representation on the part of Nexans.

eXtreme® Cat 6 UTP Patch Cord

62460-xx*

APPLICATION

Leviton eXtreme Cat 6 patch cords are designed to be used in typical Cat 6 channel applications. Leviton eXtreme Cat 6 systems are designed for use in high-bandwidth applications such as Gigabit Ethernet.

SPECIFICATION

Patch cords shall meet or exceed requirements for Cat 6 performance described in ANSI/TIA-568-C.2. Patch cords shall be stranded conductor with an 8-position modular plug on each end. The cords shall be available in standard lengths of 1, 3, 5, 7, 10, 15, and 20 feet. Patch cord plug shall be clear and contacts shall have industry-standard, ANSI/TIA-1096-A compliant 50 micro inches of gold plating.

FEATURES

- Stranded conductor for longer flex-life
- T568B wiring to function in either T568A or T568B applications
- Color-matched cords and boots

DESIGN CONSIDERATIONS

- ANSI/TIA channel performance limits the total length of work area and equipment room cords to 32 feet (10 meters) per ANSI/TIA-568-C.2 or 88.6 feet (27 meters) in a MUTOA application
- A variety of colors for color coding and organizing
- Available in six standard lengths
- Color-matched rubber boot provides protection for plug

STANDARDS COMPLIANCE

- ANSI/TIA-568-C.2
- ISO/IEC 11801-B
- ANSI/TIA-1096-A
- cULus Listed
- UL 444 CM rated
- Supports IEEE 802.3af, 802.3at, and Cisco UPoE up to 60 watts
- Supports emerging PoE standards such as the draft IEEE 802.3bt, up to 100 watts; with bundle sizes of 100 cords or less

PERFORMANCE SPECIFICATIONS

Dimensions	See page two
Outer Diameter (O.D.):	0.225"
Materials:	Plug body is high-impact, fire-retardant plastic rated UL 94V-0
Color:	White, Grey, Black, Blue, Red, Yellow, Green (Matching color boots)

COUNTRY OF ORIGIN

China

WARRANTY INFORMATION

For a copy of Leviton product warranties, visit www.leviton.com/warranty.

No Exception Taken
MFIA, Inc
Gary Adovnik
Checking is only for general conformance with the design concept of the project and general compliance with the information given in the contract documents. Any action shown is subject to the requirements of the plans and specifications. Contractor is responsible for: Dimensions, which shall be confirmed and correlated at the job site; fabrication processes and techniques of construction; coordination of his work with that of all other trades; and the satisfactory performance of his work.

06/15/2021

Leviton Network Solutions
2222 - 222nd St. SE
Bothell, WA 98021-4416

tel 1-800-824-3005
tel +1-425-486-2222
appeng@leviton.com
www.leviton.com

Asia / Pacific
T +1.631.812.6228
E infoasean@leviton.com

Canada
T +1.514.954.1840
E pcservice@leviton.com

Caribbean
T +1.954.593.1896
E infocaribbean@leviton.com

China
T +852.2774.9876
E infochina@leviton.com

Colombia
T +57.1.743.6045
E infocolombia@leviton.com

Europe
T +33.6.8869.1380
E infoeurope@leviton.com

India / SAARC
T +971.4.886.4722
E infoindia@leviton.com

Mexico
T +52.55.5082.1040
E lsamarketing@leviton.com

Middle East & Africa
T +971.4.886.4722
E lmeinfo@leviton.com

South Korea
T +82.2.3273.9963
E infokorea@leviton.com

Copyright © 2016 Leviton Manufacturing Co., Inc. All rights reserved. Subject to change without notice.

Revised January 2016

ELECTRONIC FILES

For CAD files, typical specs, or technical drawings (.DXF, .DWG), visit www.leviton.com.

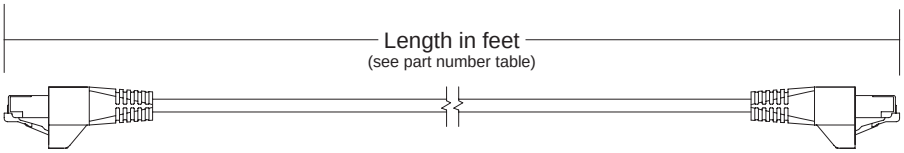

O.D.: 0.225"

PART NUMBERS

Description	Part No.
Leviton eXtreme® Cat 6 Patch Cord, 1-foot length (0.3 m)	62460-01*
Leviton eXtreme Cat 6 Patch Cord, 3-foot length (0.9 m)	62460-03*
Leviton eXtreme Cat 6 Patch Cord, 5-foot length (1.5 m)	62460-05*
Leviton eXtreme Cat 6 Patch Cord, 7-foot length (2.1 m)	62460-07*
Leviton eXtreme Cat 6 Patch Cord, 10-foot length (3.0 m)	62460-10*
Leviton eXtreme Cat 6 Patch Cord, 15-foot length (4.6 m)	62460-15*
Leviton eXtreme Cat 6 Patch Cord, 20-foot length (6.1 m)	62460-20*

*=Colors: (W) White, (Y) Yellow, (L) Blue, (E) Black, (R) Red, (G) Green, (S) Grey

Make to order! leviton.com/configurator

For assistance customizing your patch cords, please visit www.leviton.com/configurator or call Tech Support at 800.824.3005.

A16 5965

ISO 9001 REGISTERED Quality Manufacturer

Leviton Network Solutions
2222 - 222nd St. SE
Bothell, WA 98021-4416

tel 1-800-824-3005
tel +1-425-486-2222
appeng@leviton.com
www.leviton.com

Asia / Pacific
T +1.631.812.6228
E infoasean@leviton.com

Canada
T +1.514.954.1840
E pcservice@leviton.com

Caribbean
T +1.954.593.1896
E infocaribbean@leviton.com

China
T +852.2774.9876
E infochina@leviton.com

Colombia
T +57.1.743.6045
E infocolombia@leviton.com

Europe
T +33.6.8869.1380
E infoeurope@leviton.com

India / SAARC
T +971.4.886.4722
E infoindia@leviton.com

Mexico
T +52.55.5082.1040
E lsamarketing@leviton.com

Middle East & Africa
T +971.4.886.4722
E lmeinfo@leviton.com

South Korea
T +82.2.3273.9963
E infokorea@leviton.com

Copyright © 2016 Leviton Manufacturing Co., Inc. All rights reserved. Subject to change without notice.

Revised January 2016

eXtreme® Cat 6 Component-Rated UTP QuickPort® Connector

APPLICATION

The eXtreme Cat 6 connector is designed to be used with all QuickPort compatible products. The connector includes patented Retention Force Technology which promotes consistent performance over the life of the system. It features unique pair separation towers allowing for quicker and easier terminations. The connector is built on a 180-degree configuration with the punch field in the back, allowing for rear termination.

SPECIFICATION

The connector shall meet or exceed the requirements for channel- and component-level performance as described in ANSI/TIA-568-C.2 Category 6 standards, as well as the Class E requirements described in ISO/IEC 11801. The connector shall be individual snap-in style. The connectors shall also be in compliance with all National Electrical Codes; compliant with ANSI/TIA-1096-A; UL listed; and independently verified. In addition to Category 6 compliance, the connector shall have the ability to support high-megabit and shared-sheath applications. All plastics used in construction of the connector bodies shall be fire retardant with a UL flammability rating of 94V-0. Termination of all connectors shall be 110-type insulation displacement connectors (IDC). The connector shall provide a ledge directly adjacent to the 110-style termination against which the wires can be terminated and cut in one action by the installation craftsperson. Connector wiring is universal and will accommodate installation color codes for T568A and T568B wiring schemes. The termination field shall be in the rear for easy access. The connector shall fit in a variety of telecommunications wallplates, outlets, and field-configurable patch panels and patch blocks.

COUNTRY OF ORIGIN

USA

FEATURES

- Terminates 26-22 gauge solid conductors
- Capable of multiple re-terminations
- Gas-tight IDC connectors prevent corrosion
- Dual-layer T568B/T568A wiring label simplifies punchdown
- Patented Retention Force Technology protects tines from damage and increases system longevity
- Pair Separation Tower design facilitates separation of conductors and minimizes untwisting
- 180-degree configuration allows for rear termination
- Available in 13 ANSI/TIA-606-B compatible colors for color coding or organization
- Available individually, in bulk packages of 25, and in bulk packages of 150 with a JackRapid™ Punchdown Tool

DESIGN CONSIDERATIONS

- Use in any QuickPort housing to support eXtreme Cat 6 UTP connectivity in surface-mount, flush-mount, or modular furniture outlets and field-configurable panels
- Can be used in conjunction with other QuickPort snap-in modules for voice/data and video applications over UTP, coax, and fiber

STANDARDS COMPLIANCE

- ANSI/TIA-568-C.2
- ISO/IEC 11801
- ANSI/TIA-1096-A (formerly FCC Part 68)
- cULus Listed
- IEEE 802.3at (Type 1) Power over Ethernet (PoE) up to 15.4 watts
- IEEE 802.3at (Type 2) PoE+ up to 30 watts
- IEEE 802.3bt (Tpe 3) PoE+ up to 60 watts
- IEEE 802.3bt (Type 4) PoE+ up to 100 watts
- Cisco Universal Power Over Ethernet (UPOE) up to 60 watts
- Power over HDBaseT™ (POH) up to 100 watts

PHYSICAL SPECIFICATIONS

Dimensions: See page two

Materials: **Connector Body:** High-impact, fire-retardant plastic rated UL 94V-0.
Spring-Wire Contacts: High-quality copper-based alloy, plated with 50 micro-inches of gold over 100 micro-inches of nickel for lowest contact resistance, maximum life.

Environmental Conditions: **Storage Temperature:** -40 °C to +70 °C
Operating Temperature: -10 °C to +60 °C

No Exception Taken
MFIA, Inc
Gary Adovnik
Checking is only for general conformance with the design concept of the project and general compliance with the information given in the contract documents. Any action shown is subject to the requirements of the plans and specifications. Contractor is responsible for: Dimensions, which shall be confirmed and correlated at the jobsite; fabrication processes and techniques of construction; coordination of his work with that of all other trades; and the satisfactory performance of his work.
06/15/2021

Leviton Network Solutions
2222 - 222nd St. SE
Bothell, WA 98021-4416

tel 1-800-824-3005
tel +1-425-486-2222
appeng@leviton.com
www.leviton.com

Asia / Pacific
T +1.631.812.6228
E infoasean@leviton.com

Canada
T +1.514.954.1840
E lpcservice@leviton.com

Caribbean
T +1.954.593.1896
E infocaribbean@leviton.com

China
T +852.2774.9876
E infochina@leviton.com

Colombia
T +57.1.743.6045
E infocolombia@leviton.com

Europe
T +44.0.1592.772124
E customerservice@brand-rex.com

India / SAARC
T +971.4.886.4722
E infoindia@leviton.com

Mexico
T +52.55.5082.1040
E lsamarketing@leviton.com

Middle East & Africa
T +971.4.886.4722
E lmeinfo@leviton.com

South Korea
T +82.2.3273.9963
E infokorea@leviton.com

Copyright © 2016 Leviton Manufacturing Co., Inc. All rights reserved. Subject to change without notice.

Revised August 2016

WARRANTY INFORMATION

Limited product and limited extended warranties are rendered VOID if the installed structured cabling system is used for Power over Ethernet applications that exceed the product's specified power rating.

For a copy of Leviton product warranties, visit www.leviton.com/warranty.

ELECTRONIC FILES

For CAD files, typical specs, or technical drawings (.DXF, .DWG), visit www.leviton.com.

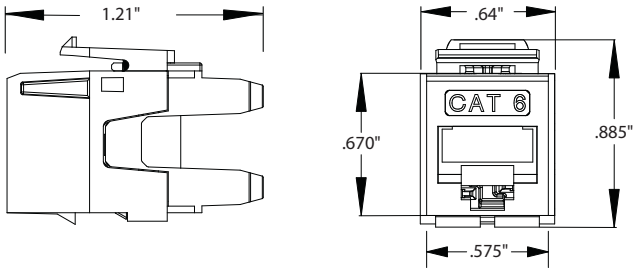

ANSI/TIA-568-C.2 CAT 6 PARAMETERS	Connecting Hardware Requirements	
	@ 100MHz	@ 250MHz
Insertion Loss (IL)	0.20	0.32
Near-end Crosstalk (NEXT)	54.0	46.0
Far-end Crosstalk (FEXT)	43.1	35.1
Return Loss (RL)	24.0	16.0
Transverse Conversion Loss (TCL)	28.0	20.0
Transverse Conversion Transfer Loss (TCTL)	28.0	20.0

*All requirements are minimum allowable except IL requirements are maximum allowable. Connecting hardware shall meet requirements of all parameters from 1-250 MHz. Values in above table are only at specific frequencies and are for references only.

PART NUMBERS

Description	Connector	QuickPack® 25/Bag	150/Bag with JackRapid™ Tool
eXtreme® Cat 6 Component-Rated UTP QuickPort® Connector, white	61110-RW6	61110-BW6	61110-JW6
eXtreme Cat 6 Component-Rated UTP QuickPort Connector, ivory	61110-RI6	61110-BI6	61110-JI6
eXtreme Cat 6 Component-Rated UTP QuickPort Connector, orange	61110-RO6	61110-BO6	61110-JO6
eXtreme Cat 6 Component-Rated UTP QuickPort Connector, blue	61110-RL6	61110-BL6	61110-JL6
eXtreme Cat 6 Component-Rated UTP QuickPort Connector, black	61110-RE6	61110-BE6	61110-JE6
eXtreme Cat 6 Component-Rated UTP QuickPort Connector, light almond	61110-RT6	61110-BT6	61110-JT6
eXtreme Cat 6 Component-Rated UTP QuickPort Connector, grey	61110-RG6	61110-BG6	61110-JG6
eXtreme Cat 6 Component-Rated UTP QuickPort Connector, crimson red	61110-RC6	61110-BC6	61110-JC6
eXtreme Cat 6 Component-Rated UTP QuickPort Connector, yellow	61110-RY6	61110-BY6	61110-JY6
eXtreme Cat 6 Component-Rated UTP QuickPort Connector, green	61110-RV6	61110-BV6	61110-JV6
eXtreme Cat 6 Component-Rated UTP QuickPort Connector, purple	61110-RP6	61110-BP6	61110-JP6
eXtreme Cat 6 Component-Rated UTP QuickPort Connector, brown	61110-RB6	61110-BB6	61110-JB6
eXtreme Cat 6 Component-Rated UTP QuickPort Connector, dark red	61110-RR6	61110-BR6	61110-JR6

H16 6356

ISO 9001 REGISTERED Quality Manufacturer

Leviton Network Solutions
2222 - 222nd St. SE
Bothell, WA 98021-4416

tel 1-800-824-3005
tel +1-425-486-2222
appeng@leviton.com
www.leviton.com

Asia / Pacific
T +1.631.812.6228
E infoasean@leviton.com

Canada
T +1.514.954.1840
E pcservice@leviton.com

Caribbean
T +1.954.593.1896
E infocaribbean@leviton.com

China
T +852.2774.9876
E infochina@leviton.com

Colombia
T +57.1.743.6045
E infocolombia@leviton.com

Europe
T +44.0.1592.772124
E customerservice@brand-rex.com

India / SAARC
T +971.4.886.4722
E infoindia@leviton.com

Mexico
T +52.55.5082.1040
E lsamarketing@leviton.com

Middle East & Africa
T +971.4.886.4722
E lmeinfo@leviton.com

South Korea
T +82.2.3273.9963
E infokorea@leviton.com

Copyright © 2016 Leviton Manufacturing Co., Inc. All rights reserved. Subject to change without notice.

Revised August 2016

Single-Gang QuickPort® Wallplates

APPLICATION

Single-Gang QuickPort Wallplates accept QuickPort connectors to support multimedia applications with 1, 2, 3, 4, or 6 ports. Use where a one-piece, single-gang, economical flush-mount housing is desired. Available in six colors (white, light almond, ivory, grey, brown, and black) with color-matched screws.

SPECIFICATION

The wallplate housing shall be a one-piece, single-gang flush-mount style that fits standard NEMA openings, or four-square boxes with reducer. It should provide 1, 2, 3, 4, or 6 ports. Must be able to accept all Leviton QuickPort connectors. It must be made of high-impact, fire-retardant plastic rated UL 94V-0, and be cULus Listed, and compliant with ANSI/TIA-568-C.0 specifications. The wallplate shall accommodate low-voltage box eliminators for a flush mount.

FEATURES

- Color-matched wallplate screws
- Fits within minimum rectangular NEMA openings and accommodates low-voltage box eliminators for a flush mount
- Compatible with all individual QuickPort connectors
- Individual port configurability allows specification flexibility
- Narrow module width allows high port density in a small area

DESIGN CONSIDERATIONS

- Fits single-gang back boxes, or four-square boxes with appropriate user-provided reducer
- Put blanks in unused ports for future expansion
- Specify port identification method (colored modules, designation labels, and custom silk-screening available/to identify ports, use different colored connectors for each application or Leviton pre-printed Port Designation Labels (41080-LEB)

STANDARDS COMPLIANCE

- cULus Listed (UL 1863 & CAN/CSA-C22.2 No. 182.4)
- ANSI/TIA-568-C.0

PHYSICAL SPECIFICATIONS

Dimensions:	See page two
Materials:	High-impact, durable, fire-retardant plastic rated UL 94V-0
Capacity:	Available in 1-, 2-, 3-, 4-, and 6-port versions
Mounting:	Color-matched screws

COUNTRY OF ORIGIN

USA

WARRANTY INFORMATION

For a copy of Leviton product warranties, visit www.leviton.com/warranty.

Leviton Network Solutions
2222 - 222nd St. SE
Bothell, WA 98021-4416

tel 1-800-824-3005
tel +1-425-486-2222
appeng@leviton.com
www.leviton.com

Asia / Pacific
T +1.631.812.6228
E infoasean@leviton.com

Canada
T +1.514.954.1840
E pcservice@leviton.com

Caribbean
T +1.954.593.1896
E infocaribbean@leviton.com

China
T +852.2774.9876
E infochina@leviton.com

Colombia
T +57.1.743.6045
E infocolombia@leviton.com

Europe
T +33.6.8869.1380
E infoeurope@leviton.com

India / SAARC
T +971.4.886.4722
E infoindia@leviton.com

Mexico
T +52.55.5082.1040
E lsamarketing@leviton.com

Middle East & Africa
T +971.4.886.4722
E lmeinfo@leviton.com

South Korea
T +82.2.3273.9963
E infokorea@leviton.com

Copyright © 2015 Leviton Manufacturing Co., Inc. All rights reserved. Subject to change without notice.

Revised July 2015

ELECTRONIC FILES

For CAD files, typical specs, or technical drawings (.DXF, .DWG), visit www.leviton.com.

41080-1xP

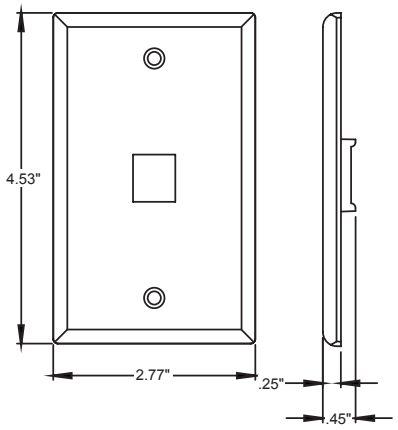

41080-2xP

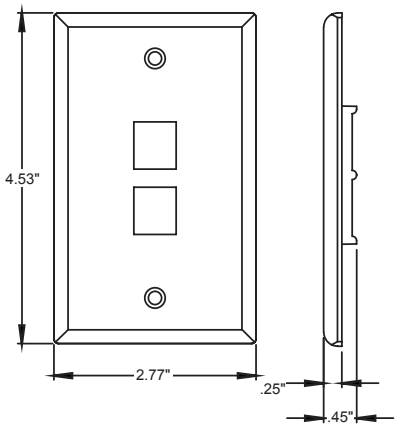

41080-3xP

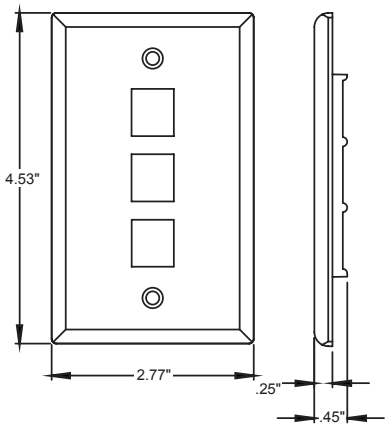

41080-4xP

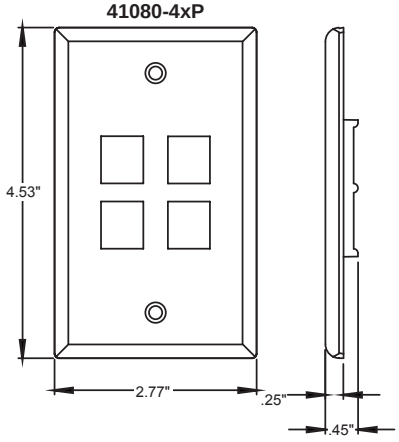

41080-6xP

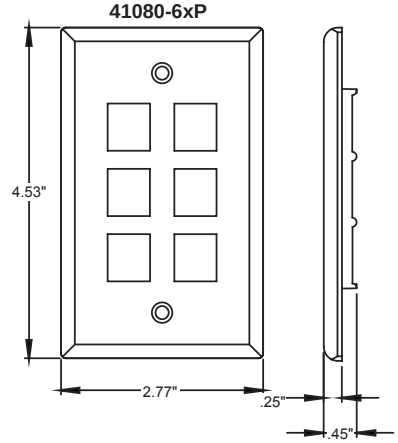

41080-xxP

No Exception Taken
MFIA, Inc
Gary Adovnik
Checking is only for general conformance with the design concept of the project and general compliance with the information given in the contract documents. Any action shown is subject to the requirements of the plans and specifications. Contractor is responsible for: Dimensions, which shall be confirmed and correlated at the job site; fabrication processes and techniques of construction; coordination of his work with that of all other trades; and the satisfactory performance of his work.

06/15/2021

PART NUMBERS

Description	WHITE	LT. ALMOND	IVORY	GREY	BROWN	BLACK
Single-Gang QuickPort® Wallplate, 1 Port	41080-1WP	41080-1TP	41080-1IP	41080-1GP	41080-1BP	41080-1EP
Single-Gang QuickPort Wallplate, 2 Ports	41080-2WP	41080-2TP	41080-2IP	41080-2GP	41080-2BP	41080-2EP
Single-Gang QuickPort Wallplate, 3 Ports	41080-3WP	41080-3TP	41080-3IP	41080-3GP	41080-3BP	41080-3EP
Single-Gang QuickPort Wallplate, 4 Ports	41080-4WP	41080-4TP	41080-4IP	41080-4GP	41080-4BP	41080-4EP
Single-Gang QuickPort Wallplate, 6 Ports	41080-6WP	41080-6TP	41080-6IP	41080-6GP	41080-6BP	41080-6EP

G15 5475

ISO 9001 REGISTERED Quality Manufacturer

Leviton Network Solutions
2222 - 222nd St. SE
Bothell, WA 98021-4416

tel 1-800-824-3005
tel +1-425-486-2222
appeng@leviton.com
www.leviton.com

Asia / Pacific
T +1.631.812.6228
E infoasean@leviton.com

Canada
T +1.514.954.1840
E pcservice@leviton.com

Caribbean
T +1.954.593.1896
E infocaribbean@leviton.com

China
T +852.2774.9876
E infochina@leviton.com

Colombia
T +57.1.743.6045
E infocolombia@leviton.com

Europe
T +33.6.8869.1380
E infoeurope@leviton.com

India / SAARC
T +971.4.886.4722
E infoindia@leviton.com

Mexico
T +52.55.5082.1040
E lsamarketing@leviton.com

Middle East & Africa
T +971.4.886.4722
E lmeinfo@leviton.com

South Korea
T +82.2.3273.9963
E infokorea@leviton.com

Copyright © 2015 Leviton Manufacturing Co., Inc. All rights reserved. Subject to change without notice.

Revised July 2015

No Exception Taken
MFIA, Inc
Gary Adovnik
Checking is only for general conformance with the design concept of the project and general compliance with the information given in the contract documents. Any action shown is subject to the requirements of the plans and specifications. Contractor is responsible for: Dimensions, which shall be confirmed and correlated at the job site; fabrication processes and techniques of construction; coordination of his work with that of all other trades; and the satisfactory performance of his work.
06/15/2021

Hook and Loop Cable Ties

The comprehensive family of hook and loop cable ties delivers reliability by protecting against over-tensioning of high-performance fiber and copper cables. These ties are adjustable, releasable, and reusable to effectively support frequent moves, adds, and changes (MACs). A wide range of designs, sizes, and colors provides flexibility and an aesthetically pleasing appearance.

Key Features	Benefits
Soft hook and loop material	Reliability – Safe way to effectively bundle cables while maintaining network data integrity by protecting against over-tensioning; minimal installation time; no tools required
Releasable design	Scalability – Adjustable, releasable, and reusable to accommodate frequent moves, adds, and changes (MACs) which supports evolving changes to equipment and cabling for future growth; supports rapid deployment
Wide range of designs, sizes, and colors	Aesthetics – Allows design flexibility and provides a professional, finished appearance
Plenum rated styles	UL listed cable ties can be safely applied in plenum or air handling spaces per NEC, Section 300-22 (C) and (D)
Pre-cut, perforated, or continuous roll ties	Allows choices to fit any individual need
Comprehensive product offering	Supports a wide range of applications; allows maximum installation flexibility

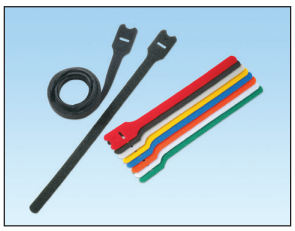

Tak-Ty® Loop Ties
Slot allows for pre-wrapping of bundles

Tak-Ty® Strip Ties
Rolls perforated in convenient 6", 8", or 12" strips

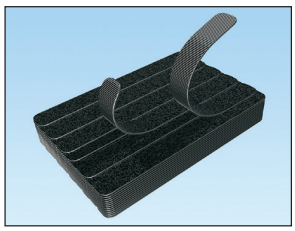

Tak-Ty® Stacked Strips
Eliminates cutting and staging 7" Strips (100 pieces)

Tak-Ty® Rolls
Lengths: 15' and 75' can be cut to any length

Tak-Ty® Cable Ties – Plenum-rated
UL Listed loop style and strip style

Ultra-Cinch™ Ties
Cinch ring provides extra strength

Tak-Tape™ Rolls
General purpose fastener

Tak-Ty® Hook & Loop Cable Ties

- Soft, premium material is safe to use on high-performance cabling
- Adjustable, releasable, and reusable up to hundreds of times
- Broad selection of durable designs and sizes
- Select ties are UL listed for use in plenum or air handling spaces (such as ceiling voids and under floor areas) per NEC, Section 300-22 (C) and (D); flammability rating: UL 94V-2
- A full range of colors; see Color Chart on page 4

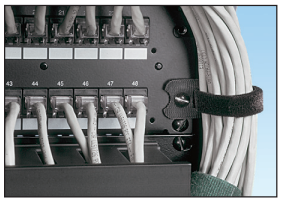

Rack application X-Out for #10 Truss Head Screw
Loop Tie: HLT2I-X0

Available in eight colors

Ordering Information

Overhead application
Continuous rolls
HLS-15R6

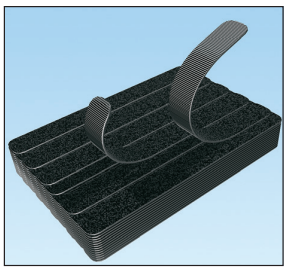

Convenient packaging (100 pieces)
HLB2S-C0

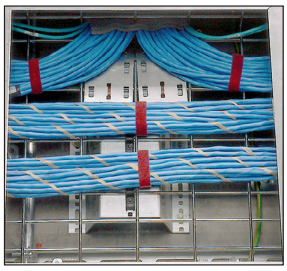

Underfloor (Plenum application)
HLSP3S-X12
HLTP3I-X12

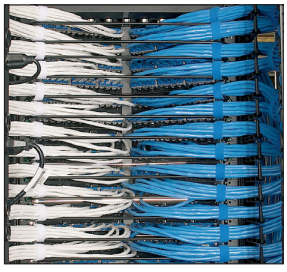

Rack application
Continuous rolls
HLS-15R10, HLS-15R6

Part Number	Length		Width		Max. Bundle Dia.		Min. Loop Tensile Str.‡		Std. Pkg. Qty.	Std. Ctn. Qty.
	In.	mm	In.	mm	In.	mm	Lbs.	N		
Loop Ties – Slot allows for pre-wrapping of bundles; X-Out allows for use with #10 truss head screw										
HLT2I-X0^*	8.00	203.0	0.50	12.7	1.91	49.0	40	178	10	100
HLT3I-X0^*	12.00	305.0	0.50	12.7	3.18	81.0	40	178	10	100
UL Listed Loop Ties (Maroon) for plenum applications										
HLTP2I-X12	8.00	203.0	0.50	12.7	1.91	49.0	40	178	10	100
HLTP3I-X12	12.00	305.0	0.50	12.7	3.18	81.0	40	178	10	100
UL Listed Loop Ties (Black) for plenum applications										
HLTP2I-X0	8.00	203.0	0.50	12.7	1.91	49.0	40	178	10	100
HLTP3I-X0	12.00	305.0	0.50	12.7	3.18	81.0	40	178	10	100
Strip Ties – Perforated in convenient 6", 12", and 18" strips										
HLS1.5S-X0*	6.00	152.0	0.75	19.1	1.50	38.0	50	222	10	100
HLS3S-X0*	12.00	305.0	0.75	19.1	3.20	81.0	50	222	10	100
HLS5S-X0*	18.00	457.0	0.75	19.1	5.00	127.0	50	222	10	100
Stacked Strip Ties – eliminates cutting ties to length and staging them for each job; rounded edges for installer safety – 100 pieces										
HLB2S-C0*	7.00	178.0	0.75	19.1	1.60	41	50	222	1	10
UL Listed Strip Ties (Maroon) for plenum applications										
HLSP1.5S-X12	6.00	152.0	0.75	19.1	1.50	38.0	50	222	10	100
HLSP3S-X12	12.00	305.0	0.75	19.1	3.20	81.0	50	222	10	100
HLSP5S-X12	18.00	457.0	0.75	19.1	5.00	127.0	50	222	10	100
UL Listed Strip Ties (Black) for plenum applications										
HLSP1.5S-X0	6.00	152.0	0.75	19.1	1.50	38.0	50	222	10	100
HLSP3S-X0	12.00	305.0	0.75	19.1	3.20	81.0	50	222	10	100
HLSP5S-X0	18.00	457.0	0.75	19.1	5.00	127.0	50	222	10	100

Part Number	Length		Width		Max. Bundle Dia.		Min. Loop Tensile Str.‡		Std. Pkg. Qty.	Std. Ctn. Qty.
	Ft.	m	In.	mm	In.	mm	Lbs.	N		
Continuous Rolls – 15' and 75' lengths – can be cut to desired length, eliminating waste										
HLM-15R0*	15.0	4.6	0.33	8.4	Various	Various	40	178	1	10
HLS-15R0*	15.0	4.6	0.75	19.1	Various	Various	50	222	1	10
HLS-75R0*	75.0	22.9	0.75	19.1	Various	Various	50	222	1	10

^Bulk packaging available with 1,000 ties per roll (HLT2I-M0 and HLT3I-M0)
Contact Customer Service for additional information.

*When ordering colors, replace 0 (Black) with 2 (Red), 3 (Orange), 4 (Yellow), 5 (Green), 6 (Blue), 10 (White); also see color chart on page 4.

‡Minimum 2" overlap required to achieve loop tensile rating.

Ultra-Cinch™ Hook & Loop Cable Ties

- Soft, premium material is safe to use on high-performance cabling
- Adjustable, releasable, and reusable multiple times
- Unique material with hooks and loops on same side allows user to secure a greater range of bundle diameters, including smaller diameter bundles
- Low-profile, contoured cinch ring provides extra strength and bundle tightness, while reducing overall bundle size
- Grommet styles offer strength and assure reliable installations that resist pullout when bundling and mounting cables within cabinet applications
- Tapered tip facilitates easy, snag-free threading
- A full range of colors; see Color Chart on page 4

Three styles available in eight colors

Design Styles

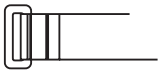

Cinch Tie (UCT)

Cinch Tie – Center Mount Grommet (UGCTC)

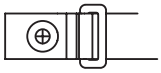

Cinch Tie – End Mount Grommet (UGCTE)

Cinch Tie on bundle
UCT3S-X0

Ordering Information

Cinch Tie mounted on rack
UGCTC3S-X0

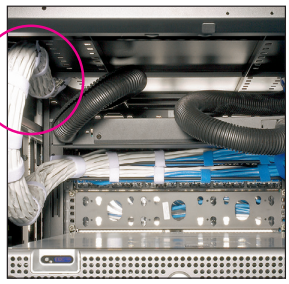

Cinch Tie mounted within cabinet
UGCTC3S-X10

Part Number	Length In.	Length mm	Width In.	Width mm	Max. Bundle Dia. In.	Max. Bundle Dia. mm	Min. Loop Tensile Str.‡ Lbs.	Min. Loop Tensile Str.‡ N	Std. Pkg. Qty.	Std. Ctn. Qty.
Cinch Ties										
UCT3S-X0*	12.00	305.0	0.85	21.6	3.00	76.0	50	222	10	100
UCT5S-X0*	18.00	457.0	0.85	21.6	5.00	127.0	50	222	10	100
Cinch Ties – Center Mount Grommet – bundle is centered over mounting point										
UGCTCV1.5S-X0■	7.50	190.0	0.85	21.6	1.50	38.0	50	222	10	100
UGCTC3S-X0*	12.00	305.0	0.85	21.6	3.00	76.0	50	222	10	100
UGCTC5S-X0*	18.00	457.0	0.85	21.6	5.00	127.0	50	222	10	100
Cinch Ties – End Mount Grommet – bundle is offset from mounting point										
UGCTE3S-X0*	12.00	305.0	0.85	21.6	3.00	76.0	50	222	10	100
UGCTE5S-X0*	18.70	475.0	0.85	21.6	5.00	127.0	50	222	10	100

■UL 94V-2 rated material.

*When ordering colors of above cinch ties (including center and end mount grommet ties), replace 0 (Black) with 2 (Red), 3 (Orange), 4 (Yellow), 5 (Green), 6 (Blue), 10 (White); also see color chart on page 4.

‡Minimum 2" overlap required to achieve loop tensile rating.

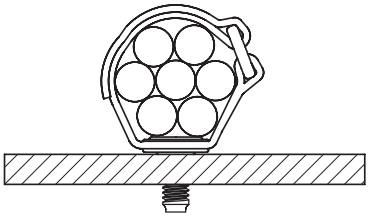

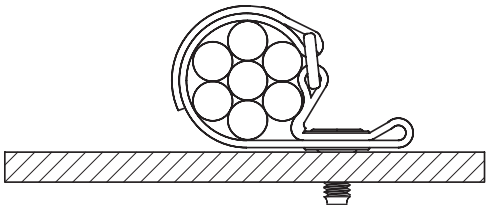

Part Number	Part Description	Std. Pkg. Qty.	Std. Ctn. Qty.
Flat Head Screws for Grommet Cinch Ties			
UCTGS1224-X	12-24 UNC x 5/8" flat head Phillips screw.	10	100
UCTGSM5-X	M5 x 16mm flat head Phillips screw.	10	100
UCTGSM6-X	M6 x 16mm flat head Phillips screw.	10	100

No Exception Taken
MFIA, Inc
Gary Adovnik
Checking is only for general conformance with the design concept of the project and general compliance with the information given in the contract documents. Any action shown is subject to the requirements of the plans and specifications. Contractor is responsible for: Dimensions, which shall be confirmed and correlated at the job site; fabrication processes and techniques of construction; coordination of his work with that of all other trades; and the satisfactory performance of his work.
06/15/2021

Tak-Tape® Hook & Loop Cable Tie Rolls

- Strong, low-profile, flexible material; safe to use on high-performance cabling
- Adjustable, releasable, and reusable
- Cost effective for general purpose bundling
- Continuous rolls can be easily cut to size
- Leaves no residue
- Available in black

Convenient packaging

TTR-35RX0

Ordering Information

Part Number	Length		Width		Max. Bundle Dia.		Min. Loop Tensile Str.‡		Packaging Description	Std. Pkg. Qty	Std. Ctn. Qty
	Ft.	mm	In.	mm	In.	mm	Lbs.	N			
TTR-20R0	20.0	6.1	0.75	19.1	Various	Various	40	178	One 20' roll in reusable plastic case	1	10
TTR-35R3-0	35.0	10.7	0.75	19.1	Various	Various	40	178	One package of three 35' rolls, shrink wrapped	1	10
TTR-35RX0	35.0	10.7	0.75	19.1	Various	Various	40	178	One package of ten 35' rolls, shrink wrapped	1	10
TTR-75R0	75.0	22.9	0.75	19.1	Various	Various	40	178	One 75' roll	1	10

‡Minimum 2" overlap required to achieve loop tensile rating.

Color Chart for Hook and Loop Cable Ties

	Black	Red	Orange	Yellow	Green	Blue	Gray	White	Maroon
Part Prefix	0	2	3	4	5	6	8	10	12
HLT, HLS, HLM, HLB, UCT, UGCTC, UGCTE	●	●	●	●	●	●	●	○	
HLTP, HLSP (Plenum)	●								●
TTS, UGCTCV1.5S-X0	●								

WORLDWIDE SUBSIDIARIES AND SALES OFFICES

PANDUIT US/CANADA
Phone: 800.777.3300

PANDUIT EUROPE LTD.
London, UK
cs-emea@panduit.com
Phone: 44.20.8601.7200

PANDUIT SINGAPORE PTE. LTD.
Republic of Singapore
cs-ap@panduit.com
Phone: 65.6305.7575

PANDUIT JAPAN
Tokyo, Japan
cs-japan@panduit.com
Phone: 81.3.6863.6000

PANDUIT LATIN AMERICA
Guadalajara, Mexico
cs-la@panduit.com
Phone: 52.33.3777.6000

PANDUIT AUSTRALIA PTY. LTD.
Victoria, Australia
cs-aus@panduit.com
Phone: 61.3.9794.9020

For a copy of Panduit product warranties, log on to www.panduit.com/warranty

For more information

Visit us at www.panduit.com

Contact Customer Service by email: cs@panduit.com or by phone: 800.777.3300

©2017 Panduit Corp.
ALL RIGHTS RESERVED.

CTCB67--WW-ENG
Replaces CTCB45--WW-ENG
8/2017

COMPLETE BOM LISTING ALL AV PARTS NECESSARY FOR OPERABLE SYSTEM

Myers Elementary School Section 27 4000 Equipment List

ITEM	DESCRIPTION	ID	BRAND	MODEL	QTY
2	**Cafeteria A/V System**				
2.01A	Projector		Epson	L1070UNL	1
2.01B	Projector Lens		Epson	ELPLM10	1
2.01C	Projector Mount		Chief	VCTUW	1
2.01D	Projector Secure Cage		Chief	PG3AW	1
2.02A	Audio Amplifier		Crown	DCI2/600N	1
2.02B	Audio Processor		Biamp	Tesiraforte AI	1
2.02C	Presentation Switcher		Extron	IN1608 XI IPCP SA	1
2.02D	Ethernet Switch		Cisco	SG110-08D	1
2.02E	Touch Screen Control		Extron	TLP Pro 725M	1
2.02F	Wireless Microphone		Audio-Technica	ATW-3211/831	2
2.02G	Wall Mounted Rack		Lowell	LWR-1223	1
2.03A	Speakers		EAW	VFR159i	2
2.04A	Portable Mixer		Behringer	QX1622USB	1
2.04A	Portable Mixer Mics		Behringer	ULM202USB	1
2.04B	Solid-State Recorder		Denon	DN-300R MKII	1
2.04C	Recorder		Zoom	H6	1
2.04D	Wireless Microphone		Audio-Technica	PRO 8HEcH	1
2.04E	Rolling Cart		Lowell	LPR-2122	1
2.05A	HDMI Patch Cables		Liberty	E2-HDSEM-xx	1
2.05B	XLR Patch Cable		Rapco Horizon	NM1	
2.06A	DTP Wall Stations		Extron	DTP T HWP 4K 231D	2
2.06B	DTP HDMI Receiver		Extron	DTP R HWP 4K 231D	1
2.06C	XLR Wall Station		RDL	D-XLR2F	4
2.06D	Audio Wall Station		RDL	D-CIJ3	1

Pro L1070UNL WUXGA 3LCD Laser Projector with 4K Enhancement

Contact Us
800-442-1977

Mon-Fri 7am-5pm PT

No Exception Taken
MFIA, Inc
Gary Adovnik
Checking is only for general conformance with the design concept of the project and general compliance with the information given in the contract documents. Any action shown is subject to the requirements of the plans and specifications. Contractor is responsible for: Dimensions, which shall be confirmed and correlated at the job site; fabrication processes and techniques of construction; coordination of his work with that of all other trades; and the satisfactory performance of his work.

06/15/2021

Premium, compact large-venue laser projector with 4K Enhancement[1]

The powerful Pro L1070UNL, part of Epson's most compact interchangeable-lens laser projector series, offers 3-chip 3LCD technology and native WUXGA resolution with 4K Enhancement Technology[1] (1920 x 1200 x 2). Delivering extraordinary color brightness, Epson® 3LCD projectors ensure brilliant images. Providing 7,000 lumens of color brightness and 7,000 lumens of white brightness[2], the L1070UNL's laser light source and air filter offer virtually maintenance-free operation up to 20,000 hours[3]. With a high contrast ratio and BT.709 color space, it produces sharp, true-to-life images. And, it offers 11 optional interchangeable lenses.

Model: V11H940920

Overview

Ultra bright
7,000 lumens color/white brightness[2] from a compact large-venue laser projector

Exceptional widescreen display
native WUXGA with 4K Enhancement Technology[1] (1920 x 1200 x 2); accepts 4K content and provides up to 4.6 million pixels onscreen

Vibrant, true-to-life images
with Epson 3-chip 3LCD technology

Worry-free operation
solid-state laser light source and air filter provide virtually maintenance-free operation for up to 20,000 hours[3]

11 optional interchangeable lenses
with powered lens shift and lens memory, including an ultra short-throw lens with zero offset

Lifelike images
high contrast ratio and BT.709 color space for exceptional clarity and detail

- **Dynamic projection capabilities** — advanced built-in Edge Blending, image warping and shape overlay features for a variety of applications; direct playback from USB storage media
- **Simplified installation features** — full 360-degree mounting, wide lens shift, versatile connectivity; inputs including HDBaseT™ and HDMI® (HDCP 2.2)
- **Customized performance** — brightness modes to maximize light source life and provide a consistent brightness level
- **Multi-projector setup software** — free software controls networked projectors and gives access to warping and edge blending
- **Web- or network-based remote management** — control and monitor projector status

Eco Features

- RoHS compliant
- Recyclable product[4]
- Epson America, Inc. is a SmartWay™ Transport Partner[5]

Better Products for a Better Future™

For more information on Epson's environmental programs, go to www.epson.com/environment

What's In The Box:

- Pro L1070UNL projector
- power cable
- cable cover
- projector remote control with batteries
- Quick Setup Sheet

Specifications

Specifications Projector:

Projection System:
High-aperture Epson® 3LCD, 3-chip technology

Projection Method:
Front/rear/ceiling mount

Driving Method:
Poly-silicon TFT Active Matrix

Native Resolution:
WUXGA with 4K Enhancement[1] (1920 x 1200 x 2)

Resolution on Screen:
WUXGA with 4K Enhancement[1]/4.6 million pixels[1]

Pixel Number in Device:
2,304,000 pixels (1920 x 1200) x 3 chips

Signal Input:
Maximum Display Resolution: 4096 x 2160 (resizing display)
Display Resolution: 1920 x 1200 pixels

Color Brightness - Color Light Output:
7,000 lumens[2]

White Brightness - White Light Output:
7,000 lumens[2]

Aspect Ratio:
Supports 4:3, 16:9, 16:10

Brightness Uniformity:
85%

Pixel Arrangement:
Cross stripe

Contrast Ratio:
2,500,000:1 (Dynamic Contrast: On)

Color Reproduction:
Up to 1.07 billion colors

Light Source Life:
20,000 hours (Normal)[3]

Illumination Technology:
Laser Phosphor

General:

Operating Temperature:
32 ˚ to 113 ˚ F (0 ˚ to 45 ˚ C)

Weight:
34.4 lb without lens

Security:
Security cable hole, Kensington lock provision

Projection Lens:

Type:
Powered shift/focus/zoom (ELPLM08 Lens)

F-number:
1.7 – 2.3 (ELPLM08 Lens)

Focal Length:
24.0 mm – 38.2 mm (ELPLM08 Lens)

Zoom Ratio:
Optical zoom 1 – 1.6x (ELPLM08 Lens)

Throw Ratio Range:
1.44 – 2.33 (ELPLM08 Lens)

Lens Shift:
Vertical: ±67 percent; Horizontal: ±30 percent (ELPLM08 Lens)

Projector Details:

Input Signal:
Input Video Signal (HDMI, DVI-D and HDBaseT ports) 480i/480p/576i/576p/720p/1080i/1080p/3840 x 2160/ 4096 x 2160

Interfaces:
- DVI-D x 1
- HDMI (HDCP 2.2) x 1
- HDBaseT x 1
- 5-BNC, VGA x 1
- Audio in: Mini Stereo x 3
- Variable audio out: Mini Stereo x 1
- USB connector Type B x 1: For service only
- USB connector Type A x 1: For wireless LAN, service, content playback
- Monitor out: Mini D-sub 15-pin x 1
- Serial: RS-232c x 1
- Remote Stereo Mini x 1
- Wired LAN: RJ45

Fan Noise:
36 dB (Normal Mode); 32 dB (Medium Mode) 30 dB (Quiet Mode)

Projector Dimensions:

Including feet - with standard lens:
21.5" x 7.4" x 19.1" (545 x 189 x 484 mm)

Remote Control:

Features:
Power, source search selection, lens shift, zoom, focus, test pattern selection, A/V Mute, freeze, user ID, auto, aspect, color mode, number, page up and down, E-zoom, volume, menu, enter, esc and pointer functions

Operating Distance:
98 ft

Operating Angle:
- Right/left: Front: ± 60 degrees; Rear: ± 30 degrees
- Upper/lower: Front: + 30 to - 20 degrees; Rear: +50 to + 10 degrees

Power:

Power Supply Voltage:
100 – 240 V ±10%, 50/60 Hz AC

Power Consumption:
439 W (Normal Mode), 313 W (Extended Mode), 2W (Network Standby), 0.5 W (Energy Saving)

© 2021 Epson America, Inc.

Middle-Throw Zoom Lens #3 (ELPLM10)

Contact Us 800.463.7766

Mon-Fri 7am-4pm PT

No Exception Taken
MFIA, Inc
Gary Adovnik
Checking is only for general conformance with the design concept of the project and general compliance with the information given in the contract documents. Any action shown is subject to the requirements of the plans and specifications. Contractor is responsible for: Dimensions, which shall be confirmed and correlated at the job site; fabrication processes and techniques of construction; coordination of his work with that of all other trades; and the satisfactory performance of his work.

06/15/2021

This middle throw zoom lens is ideal for projecting large, high-quality images. Supports screen sizes from 50” to 1000".

- **Interchangeable lens** — for Pro L projectors up to 20,000 lumens and Pro G7000 Series projectors
- **Wide lens shift** — for added flexibility
- **High-quality design** — up to 1000" screen size support; 1.8 to 2.4 F-number; 55.4 mm to 83.3 mm focal length
- **Zoom ratio** — 1 – 1.5
- **Weight** — 4.9 lbs (2200 g)
- **Up to 8,000-lumen projectors** — WUXGA/WXGA 3.32 to 5.06 throw ratio; lens shift—vertical: -67 percent to +67 percent, horizontal: -30 percent to +30 percent
- **9,000- to 20,000-lumen projectors** — WUXGA 2.42 to 3.71 throw ratio; lens shift—vertical: -60 percent to +60 percent horizontal: -18 percent to +18 percent
- **Native 4K projector** — 2.34 to 3.59 throw ratio; Vertical: -58 percent to +58 percent Horizontal: -16 percent to +16 percent

Model: V12H004M0A

Overview

Works With

Large Venue Projectors

Pro L1060WNL WXGA 3LCD Laser Projector

Pro L1070W WXGA 3LCD Laser Projector

Pro L1070WNL WXGA 3LCD Laser Projector

Pro L1060W WXGA 3LCD Laser Projector

Pro L12000QNL Native 4K 3LCD Laser Projector Without Lens

Pro L12002QNL Native 4K 3LCD Laser Projector Without Lens

Pro L1060U WUXGA 3LCD Laser Projector with 4K Enhancement

Pro L1060UNL WUXGA 3LCD Laser Projector with 4K Enhancement

Pro L1070U WUXGA 3LCD Laser Projector with 4K Enhancement

© 2021 Epson America, Inc.

XL Universal Tool-Free Projector Mount

VCTUW | VCT Series (/products/chief/mounts/projector/ceiling/vct)

CHIEF

Call for availability

Feedback

Login for Price

The VCTUW XL Universal Tool-free Projector mount was designed to install quickly while maintaining a sleek aesthetic. Lighter and slimmer than its predecessor, the VCM, the VCT works well with laser projectors between 50-150 lbs (22.7 – 68 kg). Tool-free MicroZone adjustment ensures accurate and reliable image registration.

Includes the HCUW (~/link.aspx?_id=70162CBF46F045E1B1E86B9DF718735F&_z=z) Universal Interface.

Now Shipping

No Exception Taken
MFIA, Inc
Gary Adovnik
Checking is only for general conformance with the design concept of the project and general compliance with the information given in the contract documents. Any action shown is subject to the requirements of the plans and specifications. Contractor is responsible for: Dimensions, which shall be confirmed and correlated at the job site; fabrication processes and techniques of construction; coordination of his work with that of all other trades; and the satisfactory performance of his work.
06/15/2021

Features

Specifications

Adjustments	Micro Roll +/- 5°, Micro Pitch +/- 20°, Micro Yaw +/- 10°, Macro Yaw 360°
Certifications	TÜV Certified, UL Plenum
Color	White
Solution Type	Universal
Weight Capacity	150 lbs (68 kg)

Accessories

Resources

(/)

No Exception Taken
MFIA, Inc
Gary Adovnik
Checking is only for general conformance with the design concept of the project and general compliance with the information given in the contract documents. Any action shown is subject to the requirements of the plans and specifications. Contractor is responsible for: Dimensions, which shall be confirmed and correlated at the job site; fabrication processes and techniques of construction; coordination of his work with that of all other trades; and the satisfactory performance of his work.

Large Projector Security Cage

06/15/2021

PG3AW | PG Series (/products/chief/accessories/projector/cages/pg)

CHIEF

Typically ships
1 Day(s) (05/03/2021)

Feedback

Login for Price

A top security solution that fully encloses the projector mount in a locked steel cage to prevent theft, as well as recreational damage. Three sizes are available; see PG1A or PG2 for different sized enclosures

Features

Specifications

Certifications	TAA Compliant
Color	White
Max Equip Size H x W x D	11.36" x 25" x 24.9" (288 x 635 x 633 mm)
Overall Dimensions (H x W x D)	14.3" x 25.2" x 25.4" (363 x 639 x 645 mm)
Shipping Weight	50.35 lbs (22.84 kg)

Resources

FAQ

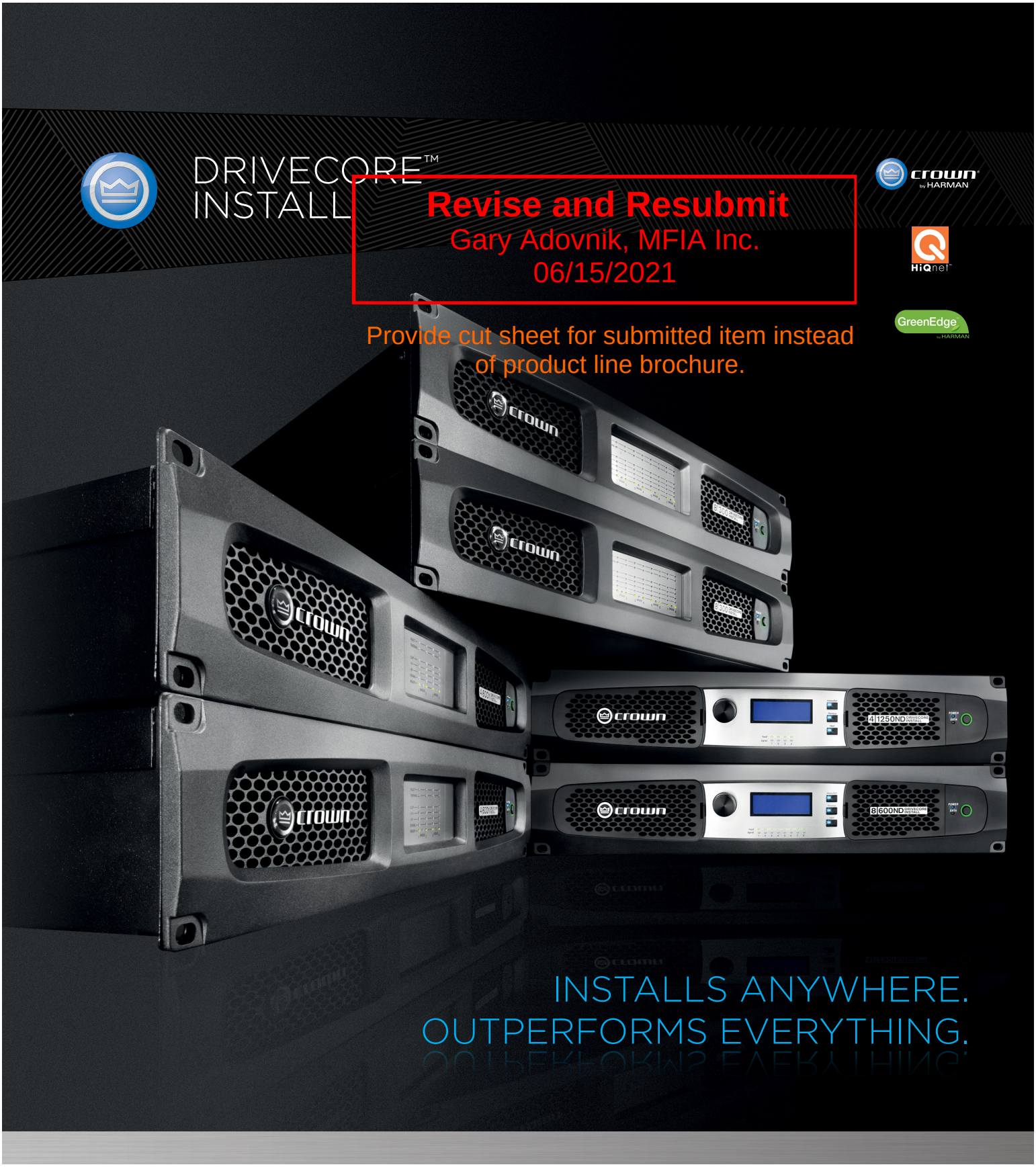
DRIVECORE™
INSTALL
Revise and Resubmit
Gary Adovnik, MFIA Inc.
06/15/2021
Provide cut sheet for submitted item instead of product line brochure.
crown by HARMAN
HiQnet
GreenEdge by HARMAN
INSTALLS ANYWHERE.
OUTPERFORMS EVERYTHING.

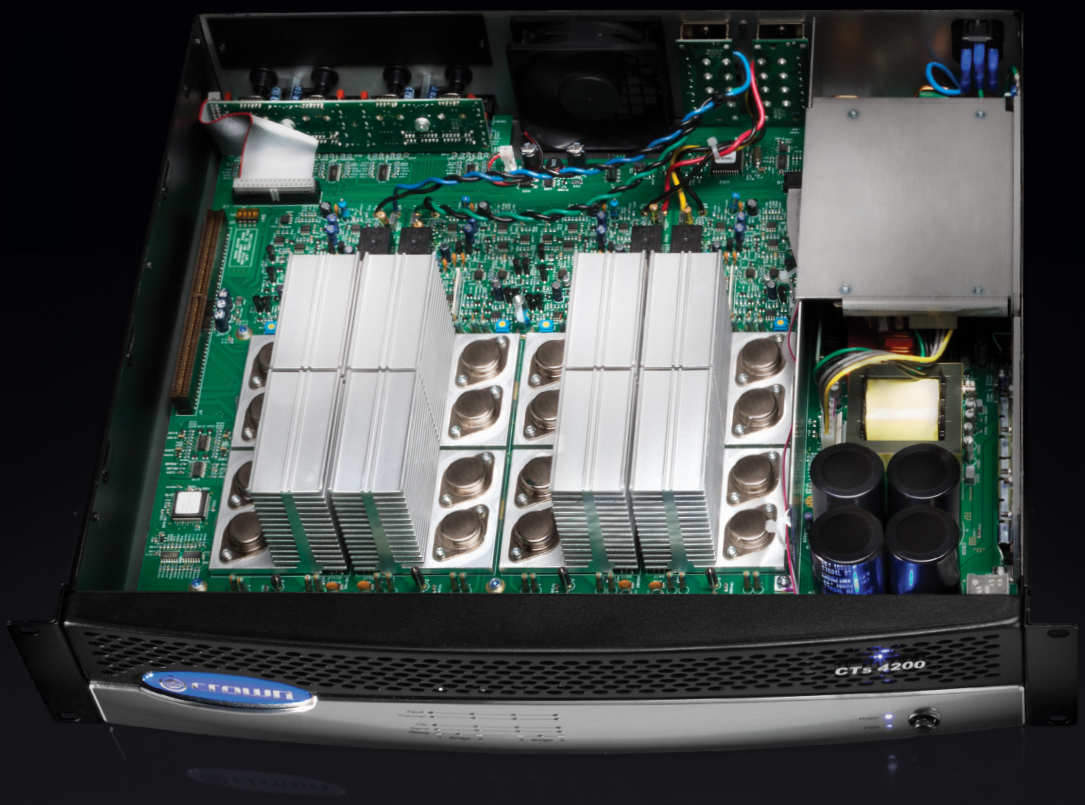

CTs 4200 | 4X250W

AUDIO INNOVATION BEYOND COMPARE.

Multiple patents – more than any of our competitors combined. Historical audio achievements. Innovative technical advances.

Crown's world-renowned reputation for excellence – built by 65 years of uninterrupted achievements in sound – continues with the introduction of the next generation of installed sound amplifiers featuring **DriveCore™ Technology**.

The culmination of nearly two decades of R&D in PWM and switch-mode amplification, DriveCore seamlessly integrates the amplifier drive stage into the power output stage and fuses everything into one very, tiny but extremely powerful chip.

This single, revolutionary chip allows us to replace 500 parts per channel pair, greatly reducing design complexity compared to that of traditional amplifiers while creating more efficiencies, long-term reliability and unsurpassed performance.

DCi 4|600 | 4X600W

A DCi 4|600 **delivers more than twice the power** while **using just half the space** of a CTs 4200 – **with almost half the current draw** – and drives 100Vrms lines at 600W.

A REVOLUTION IN INNOVATION.

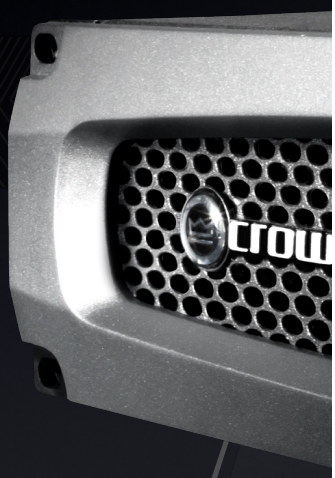

As the undisputed leader in sound amplification, Crown builds on its legacy of innovation and insight with the industry's first 100V direct drive amp: the **DriveCore™ Install Amplifier Series (DCi)**.

The ideal choice for everything from meeting rooms to massive stadiums, the highly efficient DCi Series saves you time because it configures quickly and is simple to use. Plus, its lighter, **space-saving design** makes it easy to install wherever you want.

Designed, engineered and manufactured to the industry's highest quality standards for analog or network installations, the DCi Series provides system integrators with **effortless, unmatched performance** time after time.

A SOUND DIFFERENCE YOU CAN SEE.

Actual Size

Designed for **minimum size** and **maximum power**, DriveCore offers greater accuracy, reduced weight, and best-in-class signal-to-noise performance.

The front-end drive circuits leverage the **inherent efficiency** of Class D output stages while also maintaining **superb sonic characteristics**.

DriveCore means the patented feedback and PWM circuits provide fast recovery on peak transients, accurate reproduction of low-level detail and precise tracking of low frequencies at all power levels. Plus, fewer parts results in **increased reliability** – and the legendary performance you expect from Crown.

With extremely wide tolerance for AC line conditions, whether you're on a normal power grid or fluctuating back-up generator power for Life-Safety systems, DriveCore amps deliver sound that's never compromised.

A proprietary hybrid analog-digital integrated circuit that's bolstered by multiple patents, DriveCore leads a new era of sustainable excellence. It also represents another historic milestone in our ongoing commitment to delivering audio products demanded by professionals – and that please audiences worldwide.

GreenEdge™ by HARMAN

GREENEDGE™ TECHNOLOGY **The DCi Series is a direct result of this HARMAN initiative designed to increase performance and acoustic qualities while dramatically reducing energy consumption. With the DriveCore chip replacing over 500 parts, it requires far fewer materials while easily delivering more than 90% efficiency. The Powersave feature provides additional energy savings with an Auto-Standby mode that powers down the amp to consume less than 1W. Plus, using recycled cardboard boxes to ship DCi units further reduces our carbon footprint.**

Analog Back Panel

Network Back Panel

NETWORKING MADE EASY Since the introduction of the first IQ system in 1992, Crown has deployed more networked audio systems than all other amplifier manufacturers combined. This pedigree continues today with the DCi Series amplifier. Adhering to exact TCP/IP Ethernet standards and equipped with HiQnet™ technology, the DCi Series amplifier can live on a standard network without the hassle of proprietary switches or hardware. And by following standard protocol, large systems of 400+ amplifiers can be quickly deployed on a single network backbone without any special considerations.

DCi NETWORK DISPLAY SERIES

AVB Certified - The DCi Network Display Series is AVB Certified by the AVnu Alliance®.

AUDIO NETWORKING AS EASY AS A, B, C, D. - DCi Network Amplifiers are the most flexible amplifiers yet. Effortlessly pair up any DCi Network amplifier with one of BSS Audio's Soundweb London™ processors for a system solution that can process any type of audio networking transport.

A - Process AVB audio signals through the Soundweb London BLU-805 or BLU-325 via BLU-Link into any DCi Network amplifier.

B - BLU-Link capabilities make DriveCore Install Network amplifiers and Soundweb London Processors the end-all system solution for everyone.

C - Process CobraNet audio signals through the Soundweb London BLU-800 or BLU-320 via BLU-Link into any DCi Network amplifier.

D - Process Dante audio signals through the Soundweb London BLU-806, BLU-326, or BLU-DAN via BLU link into any DCi Network amplifier.

4|2400 Network Back Panel

Network Display Back Panel

DSP

DIGITAL SIGNAL PROCESSING Crown's legendary DSP, combined with DCi's true rack density design, provides the flexibility and design tools for wide-ranging jobs while outperforming many of the world's stand-alone loudspeaker processors. With LevelMAX™, input and output EQ, delay, pilot tone monitoring and tone generators, the DSP-enabled DCi amplifiers are packed with features that can be used worldwide. Combining DSP with network monitoring and control gives consultants, engineers and end users enormous flexibility.

DCi NETWORK SERIES

TRUE RACK DENSITY – Power points of 300W or 600W in 2-/4-/8-channel configurations, or 1250W/2400W in 2-/4-channel configurations – all in a 2 Rack Unit form factor.

ANALOG & DIGITAL INPUTS – With digital audio transport via HARMAN's proprietary BLU link, plus balanced analog inputs, DCi gives you a tremendous audio advantage – at a much lower cost. The priority input router allows you to specify a primary input, and if audio is lost the amp automatically switches to the other input.

NETWORK MONITORING & CONTROL – Better monitoring, control and audio manipulation with the HiQnet™ protocol over standard TCP/IP. Remotely see how all networked DCi amplifiers are performing and control them as needed. In addition, this allows Audio Architect software and the Powered by Crown app to work with DCi amplifiers.

PROGRAMMABLE GENERAL PURPOSE INPUT/OUTPUT PORTS – GPIO ports can be configured in many different ways, such as volume controls, recall presets, or to report errors to a 3rd-party system.

DIGITAL SIGNAL PROCESSING – DSP capabilities include the following:

- LevelMAX™ Limiters
- Input/Output EQ
- Delay
- Matrix Mixer
- Speaker Line Monitoring
- FIR Crossover

AUDIO NETWORKING AS EASY AS A, B, C, D. - DCi Network Amplifiers are the most flexible amplifiers yet. Effortlessly pair up any DCi Network amplifier with one of BSS Audio's Soundweb London™ processors for a system solution that can process any type of audio networking transport.

A - Process AVB audio signals through the Soundweb London BLU-805 or BLU-325 via BLU-Link into any DCi Network amplifier.

B - BLU-Link capabilities make DriveCore Install Network amplifiers and Soundweb London Processors the end-all system solution for everyone.

C - Process CobraNet audio signals through the Soundweb London BLU-800 or BLU-320 via BLU-Link into any DCi Network amplifier.

D - Process Dante audio signals through the Soundweb London BLU-806, BLU-326, or BLU-DAN via BLU link into any DCi Network amplifier.

DCi ANALOG SERIES

TRUE RACK DENSITY – Power points of 600W in a 8-channel configuration or 1250W in a 4-channel configuration - all in a 2 Rack Unit form factor. More channels in one box allow smaller infrastructure rooms that can reduce operational costs while giving you the utmost in installation flexibility.

DIRECT DRIVE CONSTANT VOLTAGE – Save money by using smaller gauge wiring to drive the speakers using either 70Vrms or 100Vrms. With no need for a step-up transformer at the output, the DCi produces higher audio quality much more efficiently.

CHANNEL INDEPENDENT HI-Z/LOW-Z SELECTION – Drive either one or two speakers in low-Z mode, or literally hundreds of speakers in high-Z mode (70Vrms or 100Vrms). This means better design flexibility since DCi powers all loads on a channel-by-channel basis.

BRIDGEABLE CHANNEL PAIRS – Unlike amps from other manufacturers, the DCi Series channels are bridgeable – even in 100Vrms mode – which means even more adaptability for higher power applications such as subwoofers.

REMOTE ON/OFF INTERFACE – Save power by integrating the amplifier into a control system so you can easily turn it on and off.

EFFICIENT COOLING DESIGN – Highly efficient internal cooling fans provide airflow to the most heat-generating parts. Incorporating the fans into the amplifier brick design maximizes cooling while minimizing wasted energy and noise.

ADVANCED POWER FACTOR CORRECTION (PFC) UNIVERSAL POWER SUPPLY – The most advanced power supply in an installation amplifier delivers power more efficiently in almost any condition than anyone else, resulting in less power dissipated and less heat in your racks.

POWERED BY CROWN Crown's "Powered by Crown" app allows wireless control and monitoring of your DCi Network Series Amp or any Ethernet-enabled devices from Crown. Using the same protocols as HiQnet System Architect™, you can import custom control panels, set limits, or make adjustments anywhere in the venue using only your iPhone or iPad.

Available on the App Store

POWER SPECIFICATIONS

Model	Channels	2Ω	4Ω	8Ω	70Vrms	100Vrms
DCi 2|300 or 2|300N	2	150W	300W	300W	300W	300W
DCi 4|300 or 4|300N	4	150W	300W	300W	300W	300W
DCi 8|300 or 8|300N	8	150W	300W	300W	300W	300W
DCi 2|600 or 2|600N	2	300W	600W	600W	600W	600W
DCi 4|600 or 4|600N	4	300W	600W	600W	600W	600W
DCi 8|600, 8|600N, or 8|600ND	8	300W	600W	600W	600W	600W
DCi 2|1250 or 2|1250N	2	1250W	1250W	1250W	1250W	1250W
DCi 4|1250, 4|1250N, or 4|1250ND	4	1250W	1250W	1250W	1250W	1250W
DCi 2|2400N	2	2100W	2400W	1900W	2100W	2300W
DCi 4|2400N	4	2100W	2400W	1900W	2100W	2300W

PERFORMANCE SPECIFICATIONS

- Frequency Response: (1W into 8ff, 20Hz – 20kHz): 30.25dB
- Signal to Noise Ratio (A-weighted): >108dB
- THD: <0.35%
- Maximum Input Level before Compression: +20dBu
- Maximum Input Level before Clip: +26dBu
- Voltage Gain: 34dB

PHYSICAL SPECIFICATIONS

- Input connectors: Balanced 3-pin block connectors, one per channel
- Output connectors: 2 Pin terminal strip. Accepts up to 10AWG terminal forks and bare wire
- AUX connector: 3-pin block connector
- Attenuation Control: 21 detent potentiometer for levels from ∞ to 0dB
- Dimensions: 3.5" x 19" x 14.25" (8.75 cm x 47.5 cm x 35.63 cm) - 3.5" x 19" x 19" (8.9 cm x 48.3 cm x 48.3 cm)
- Weight: 18.8 lbs (8.53 kgs) - 30 lbs (13.6 kgs)
- Cooling: Continuously variable speed fan, front-to-back airflow

NETWORK DCi AMPLIFIERS INCLUDE THE PHYSICAL SPECIFICATIONS LISTED ABOVE, PLUS:

- BLU link Input: (2) RJ-45 Connectors
- Network Monitoring and Control: (1) RJ-45 Connector
- General Purpose Input/Output Control: (1) RJ-11 for 2 Ins and 2 Outs

ELECTRICAL SPECIFICATIONS

- Required AC Mains (310%): 100VAC – 240VAC 50/60Hz
- Power Draw in Sleep: Less than 1W
- Power Connector: IEC 15A, 20A, & 30A

INDUSTRY-LEADING WARRANTY

Crown offers a three-year, no-fault, fully transferable warranty on every new DCi Series amplifier we make – an unsurpassed industry standard. With this industry-leading no-fault protection, your DCi Series amplifier is warranted to meet or exceed original specifications for the first three years of ownership. If it doesn't, it will be repaired or replaced at our expense. (Outside of the US, please contact the Crown authorized distributor in your country for more details).

LEARN MORE ABOUT DCI AT
www.crownaudio.com.

DRIVECORE™ LevelMAX™ GreenEdge by HARMAN HiQnet™

Crown and Crown Audio are registered trademarks, and DriveCore, GreenEdge, CobraNet and LevelMAX are trademarks of Crown International. HiQnet is a trademark of HARMAN International Industries, Inc. Other trademarks are the property of their respective owners. Printed in USA.

©2015 HARMAN®, Inc.

DATA SHEET
TESIRAFORTÉ® AI FIXED I/O DSP

TesiraFORTÉ® AI is a fixed I/O DSP with 12 analog inputs and 8 analog outputs and includes up to 8 channels of configurable USB audio. USB audio allows TesiraFORTÉ to interface directly with USB audio hosts, as well as to take full advantage of today's most sophisticated conferencing solutions. TesiraFORTÉ AI also provides extensive audio processing, including but not limited to: signal routing and mixing, equalization, filtering, dynamics, and delay, as well as control, monitoring, and diagnostic tools; all configured through the Tesira configuration software. TesiraFORTÉ AI is best-suited for small- to medium-sized rooms that require high-quality audio solutions using voice lift and mix-minus, such as conference rooms or council chambers.

FEATURES

- 12 mic/line level inputs, 8 mic/line level outputs
- Gigabit Ethernet port
- Up to 8 channels of configurable USB audio
- RS-232 serial port
- 4-pin GPIO
- 2-line OLED display with capacitive-touch navigation
- Rack mountable (1RU)
- Supports port authentication via IEEE 802.1X
- System configuration and control via Ethernet
- Internal universal power supply
- Signal processing via intuitive software allows configuration and control for signal routing, mixing, equalization, filtering, delay and much more
- CE marked, UL listed, and RoHS compliant
- Covered by Biamp Systems' 5-year warranty

No Exception Taken
MFIA, Inc
Gary Adovnik
Checking is only for general conformance with the design concept of the project and general compliance with the information given in the contract documents. Any action shown is subject to the requirements of the plans and specifications. Contractor is responsible for: Dimensions, which shall be confirmed and correlated at the job site; fabrication processes and techniques of construction; coordination of his work with that of all other trades; and the satisfactory performance of his work.
06/15/2021

Biamp, Tesira, and TesiraFORTÉ are either trademarks or registered trademarks of Biamp Systems, LLC in the United States and other countries. ASIO is a registered trademark of Steinberg Media Technologies GmbH, used with permission. Other product names referenced may be trademarks or registered marks of their respective owners and Biamp Systems is not affiliated with or sponsored by these companies.

biamp.
A: 9300 S.W. Gemini Drive Beaverton, OR 97008 USA T: +1 503.641.7287 W: www.biamp.com

ARCHITECTS & ENGINEERS SPECIFICATION

The fixed I/O DSP shall be designed exclusively for use with Tesira® systems. The fixed I/O DSP shall support Ethernet connection for programming and control on a RJ-45 connector. The fixed I/O DSP shall have internal DSP processing. The fixed I/O DSP shall include 4 channels of General Purpose Input and Output connection (GPIO) for sending or receiving logic signals. The programming of the GPIO ports shall be software configurable. The fixed I/O DSP shall include a RS-232 connection for control data transmission into or out of the fixed I/O DSP and such operation shall be software programmable. The fixed I/O DSP shall include a Universal Serial Bus (USB) connection on a standard USB-B type connector. The fixed I/O DSP shall be software configurable to stream up to 8 channels of digital USB Class 1 Audio transmission either into or out of the fixed I/O DSP or simultaneous input and output. The fixed I/O DSP shall support port authentication via IEEE 802.1X. The fixed I/O DSP shall provide 12 balanced input connections for receiving of microphone or line level analog audio signals on screw-down, removable connectors. The fixed I/O DSP shall provide 8 balanced output channels for the transmission of microphone or line level analog audio signals on screw-down, removable connectors. Each individual channel shall have its own dedicated connection. The fixed I/O DSP shall provide front panel OLED identification of device power, status, alarm, and activity as well as system-wide alarm. The fixed I/O DSP shall be rack mountable (1RU) and feature software-configurable signal processing, including but not limited to: signal routing and mixing, equalization, filtering, dynamics, and delay, as well as control, monitoring, and diagnostic tools. The fixed I/O DSP shall be CE marked, UL listed, and shall be compliant with the RoHS directive. Warranty shall be five years. The fixed I/O DSP shall be TesiraFORTÉ® AI.

TESIRAFORTÉ AI SPECIFICATIONS

Frequency Response:	
20Hz to 20kHz, +4dBu output:	+0.25 dB/-0.5 dB
THD+N (22Hz to 22kHz):	
0dB gain, +4dBu input:	< 0.006%
54dB gain, -50dBu input:	< 0.040%
EIN (no weighting, 22Hz to 22kHz):	< -125dBu
Dynamic Range (in presence of signal)	
22Hz to 22kHz, 0dB gain:	> 108dB
Input Impedance (balanced):	8kΩ
Output Impedance (balanced):	207Ω
Maximum Input:	+24dBu
Maximum Output (selectable):	+24dBu, +18dBu, +12dBu, +6dBu, 0dBu, -31dBu
Input Gain Range (6dB steps):	0-66dB
Overall Dimensions:	
Height:	1.75 inches (44 mm)
Width:	19.0 inches (483 mm)
Depth:	10.5 inches (267 mm)
Weight:	8 lbs (3.63 kg)
Phantom Power:	+48VDC (7mA/input)

Crosstalk, channel to channel, 1 kHz:	
0dB gain, +4dBu input:	< -85dB
54dB gain, -50dBu input:	< -75dB
Sampling Rate:	48kHz
A/D - D/A Converters:	24-bit
Power Consumption:	
100-240VAC 50/60Hz:	< 35W
USB:	
Bit Depth:	16- or 24-bit
Number of Channels:	up to 8
Sample Rate:	48kHz
Environment:	
Ambient Operating Temperature Range:	32-104° F (0–40° C)
Humidity:	0–98%, non-condensing
Altitude:	0-6,600 feet (0–2000 Meters) MSL
Compliance:	
	FCC Part 15B (USA)
	CE marked (Europe)
	UL und C-UL listed (USA and Canada)
	RCM (Australia)
	RoHS Directive (Europe)

TESIRAFORTÉ AI BACK PANEL

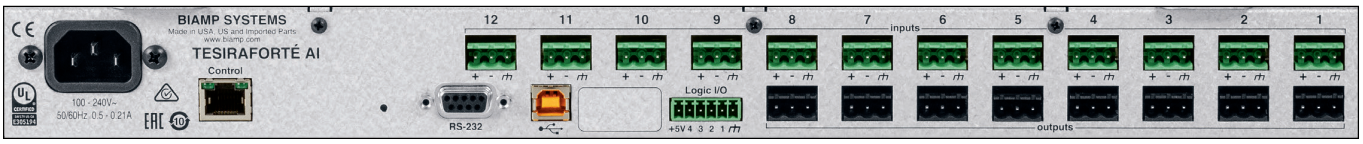

Extron

No Exception Taken
MFIA, Inc
Gary Adovnik
Checking is only for general conformance with the design concept of the project and general compliance with the information given in the contract documents. Any action shown is subject to the requirements of the plans and specifications. Contractor is responsible for: Dimensions, which shall be confirmed and correlated at the job site; fabrication processes and techniques of construction; coordination of his work with that of all other trades; and the satisfactory performance of his work.

06/15/2021

Specifications

IN1608 xi

Video input

Number/signal type	
Local input	2 RGB, RGBcvS, component video (YUVi/YUVp/HDTV), S-video, composite 4 HDMI/DVI
Remote inputs	2 DTP 330
Connectors	2 female 15-pin HD 4 female HDMI type A 2 female RJ-45 connectors
HDMI equalization	Automatic
HDMI input cable length	Up to 75' (22.9 m) for all supported input rates
Nominal level	1 Vp-p for Y of component video and S-video, and for composite 0.7 Vp-p for RGB and for R-Y and B-Y of component video 0.3 Vp-p for C of S-video
Minimum/maximum levels	Analog: 0.0 V to 1.0 Vp-p with no offset at unity gain
Impedance	75 ohms
Horizontal frequency	15 kHz to 100 kHz
Vertical frequency	24 Hz to 75 Hz
Resolution range	640x480 to 1600x1200 and 1920x1200* NTSC, PAL, SECAM, 480i, 480p, 576i, 576p, 720p, 1080i, 1080p, and 2K *reduced blanking
Return loss	>30 dB @ 5 MHz
DC offset (max. allowable)	1.5 V
Standards	NTSC 3.58, NTSC 4.43, PAL, SECAM, DVI 1.0, HDMI 1.3, HDCP 1.4

Video processing

Decoder	12 bit digital (3D adaptive comb filter)
Analog sampling	12 bits per color; 13.5 MHz standard (video) 170 MHz standard (RGB)
Digital pixel data bit depth	8, 10, or 12 bits per channel; 165 MHz pixel clock (HDMI)
Colors	1 billion (10 bit processing)

Video output

Number/signal type	
Local output	2 HDMI/DVI
Remote output	1 DTP 330 or HDBaseT (configurable)
Connectors	2 female HDMI 1 female RJ-45 connector
HDMI peripheral device power	200 mA per output

Scaled resolution	640x480[6,8,9], 800x600[6,8,9], 852x480[6,8,9], 1024x768[6,8,9], 1024x852[6,8,9], 1024x1024[6,8,9], 1280x768[6,8,9], 1280x800[6,8,9], 1280x1024[6,8,9], 1360x765[6,8,9], 1360x768[6,8,9], 1365x768[6,8,9], 1365x1024[6,8,9], 1366x768[6,8,9], 1400x1050[6,8], 1440x900[6,8,9], 1600x900[6,8], 1600x1200[6,8], 1680x1050[6,8], 1920x1200[6,8] HDTV 480p[7,8], 576p[6], 720p[3,4,5,6,7,8], 1080i[6,7,8], 1080p[1,2,3,4,5,6,7,8], 2048x1080[1,2,3,4,5,6,7,8] [1] = at 23.98 Hz, [2] = at 24 Hz, [3] = at 25 Hz,[4] = at 29.97 Hz, [5] = at 30 Hz, [6] = at 50 Hz, [7] = at 59.94 Hz, [8] = at 60 Hz, [9] = at 75 Hz
Standards	DVI 1.0, HDMI 1.3, HDCP 1.4

Sync

Input type	RGBHV, RGBS, RGsB, RGBcvS, bi-level or tri-level component video
Input standards	NTSC 3.58, NTSC 4.43, PAL, SECAM
Input level	2.75 V to 5.0 Vp-p for RGBHV or RGBS 0.6 Vp-p for component video with tri-level sync 0.3 Vp-p for component video with bi-level sync or RGsB
Input impedance	Horizontal: 510 ohms Vertical: 510 ohms
Max. input voltage	5.0 Vp-p

Shielded twisted pair interconnection

Connectors	3 female RJ-45
Termination standard	TIA/EIA-T568B
Signal transmission distance	
DTP 330	Up to 330' (100 m) using shielded twisted pair cable or XTP DTP 24 STP cable
HDBaseT	Up to 330' (100 m) using shielded twisted pair cable or XTP DTP 24 STP cable
Cable requirements	Solid conductor, 24 AWG or better
Cable recommendations	400 MHz bandwidth, STP (shielded twisted pair)

NOTE: Extron XTP DTP 24 shielded twisted pair cable is strongly recommended for optimal performance.

NOTE: Output signals:
DTP: HDMI with embedded audio, analog audio, RS-232 and IR, and remote power
HDBaseT: HDMI with embedded audio, RS-232, and IR

Audio

Gain	Unbalanced output: -6 dB; balanced output: 0 dB
Frequency response	20 Hz to 20k Hz, ±0.5 dB
THD + Noise	<0.1%, 20 Hz to 20k Hz at nominal level
S/N	>90 dB at maximum balanced output (unweighted)
Crosstalk	≤-80 dB @ 1 kHz, fully loaded
Stereo channel separation	>80 dB @ 1 kHz
Bass	+12 dB to -24 dB @ 100 Hz
Treble	+12 dB to -24 dB @ 8 kHz
Supported formats	
Analog de-embedding	LPCM-2Ch
HDMI pass-through	LPCM up to 7.2/24-bit/192 kHz, Dolby TrueHD, Dolby Digital Plus, Dolby Digital EX, Dolby Digital 5.1, Dolby Digital 2/0 Surround, Dolby Digital 2/0, Dolby Atmos 7.2, DTS-HD, DTS ES Discrete 6.1, DTS Digital Surround 5.1, DTS 2-channel, DTS:X

Audio input

Number/signal type	8 stereo line level balanced or unbalanced 2 mono mic/line level balanced or unbalanced (with available phantom power) 4 stereo, de-embedded from HDMI (PCM only) 2 DTP (de-embedded from HDMI [PCM only], or remote balanced/unbalanced, analog)

Connectors	(6) 3.5 mm captive screw connectors, 5 pole for line (2) 3.5 mm captive screw connectors, 3 pole for mic/line 4 female HDMI type A 2 female RJ-45 connectors
Impedance	>10k ohms unbalanced, >20k ohms balanced
Nominal level	Line inputs: +4 dBu, -10 dBV, adjustable Mic/line inputs: -60 dBV, +4 dBu, -10 dBV, adjustable
Maximum level	+21 dBu at rated THD+N when input gain is set to 0 dB
CMRR	>80 dB @ 1 kHz
Input gain adjustment	Line inputs: -18 dB to +24 dB, 1 dB steps, adjustable per input Mic/line inputs: -18 dB to +60 dB, 1 dB steps, adjustable per input LPCM-2Ch: -18 dB to +24 dB, 0.1 dB steps, adjustable per input

NOTE: Unbalanced analog inputs applied at a DTP transmitter input have +12 dB of gain applied to bring the signal to a nominal level for balanced operation.

DC phantom power	+48 VDC ±10% (can be switched on or off per mic/line input)

Audio output

Number/signal type

Local outputs	1 balanced or unbalanced stereo (variable) 1 balanced or unbalanced stereo; can be configured as stereo or two independently mixed mono channels 2 HDMI embedded
Remote output	1 DTP (embedded digital and remote balanced/unbalanced analog) or 1 HDBaseT (embedded digital)
Connectors	(2) 3.5 mm captive screw connectors, 5 pole 2 female HDMI 1 RJ-45 connector
Impedance	50 ohms unbalanced, 100 ohms balanced
Gain error	±0.5 dB channel to channel
Maximum level (Hi-Z)	>+20 dBu, balanced; >+14 dBu, unbalanced
Output volume range	0 to -100 dB in 1 dB steps

NOTE: System gain for the analog DTP receiver output is rated at -12 dB (unbalanced) and -6 dB (balanced).

Audio output — power amplifier (MA and SA models only)

Number/signal type

Stereo models	1 stereo (default) or 2 mono (2 channels total)
Mono models	1 mono, 70 V line

Connectors

NOTE: This connector accepts wires of 22 AWG to 12 AWG.

Stereo models	(1) 5 mm screw lock captive screw connector, 4 pole
Mono models	(1) 5 mm screw lock captive screw connector, 2 pole

Load impedance

Stereo models	4 ohms minimum
Mono models	50 ohms minimum
High pass filter — MA models only	100 Hz, 12 dB/octave roll off

Frequency response

Stereo models	20 Hz to 20 kHz, -3 dB to +1 dB @ 1 W
Mono models	100 Hz to 20 kHz, -3 dB to +1 dB @ 1 W

THD + Noise	<0.1% @ 1 kHz, 3 dB below clipping
S/N	>90 dB, 20 Hz to 20 kHz, unweighted
Amplifier type	Class D
Output power	
Stereo models	25 watts per channel, 8 ohms, 1 kHz, 0.1% THD 50 watts per channel, 4 ohms, 1 kHz, 0.1% THD
Mono models	100 watts (rms) @ 70 V, 1 kHz, 0.1% THD
Protection	Clip limiting, thermal, short circuit, DC output

Communications — scaling presentation switcher

Serial control port	1 bidirectional RS-232, 3.5 mm captive screw connector, 3 pole (rear panel)
Baud rate and protocol	9600, 8 data bits, 1 stop bit, no parity (default)
Serial control pin configuration	1 = Tx, 2 = Rx, 3 = Gnd
USB control port	1 front panel female mini USB B
USB standards	USB 2.0, high speed
All models except IPCP models	
Ethernet control port	1 female RJ-45 connector
Ethernet protocol	ARP, ICMP (ping), IP, TCP, DHCP, HTTP, Telnet
Ethernet data rate	10/100Base-T, half/full duplex with autodetect
Ethernet default settings	Link speed and duplex level = autodetected IP address = 192.168.254.254 Subnet mask = 255.255.0.0 Gateway = 0.0.0.0 DHCP = off
Program control	Extron control/configuration program for Windows® Extron Simple Instruction Set (SIS™) Microsoft® Internet Explorer®

Communications — external device (pass-through, unidirectional or bidirectional) (RS-232/IR over DTP or RS-232/IR over HDBT)

NOTE: Protocol is mirrored between the connected twisted pair endpoints and the "Over DTP" or "Over TP" ports on the IN1608 xi. Signals from a control device pass into each IN1608 xi "Over DTP" or "Over TP" port, are embedded with the twisted pair signal, and sent to individual twisted pair Tx or Rx endpoints for control of remote sink or source devices.The "Over DTP" or "Over TP" IR connections are simply pass-through connections to twisted pair endpoints, and there is no IR insert from any IN1608 xi control port to “Over DTP” or “Over TP” ports. RS-232 can be inserted from the IN1608 xi Ethernet connection.

Serial control pass-through ports	
IN1608 xi input/DTP Tx	RS-232 via (2) 3.5 mm, 5 pole captive screw connectors (shared with IR ports)
IN1608 xi output/TP Rx	RS-232 via (1) 3.5 mm, 5 pole captive screw connector (shared with IR port)
Baud rates	Up to 115200 baud
Protocol	6 - 8 data bits 1 or 2 stop bits no parity (default) even or odd parity flow control = XON, XOFF, none
Serial control pin configuration	1 = Tx, 2 = Rx, 3 = Gnd
IR pass-through control ports	TTL level (0 to 5 V) modulated infrared control from 30 kHz up to 60 kHz
IN1608 xi input/DTP Tx	(2) 3.5 mm captive screw connectors, 5 pole (shared with RS-232 ports)
IN1608 xi output/TP Rx	(1) 3.5 mm captive screw connector, 5 pole (shared with RS-232 port)
IR control pin configuration	3 = Gnd, 4 = IR Tx, 5 = IR Rx

Communications — IPCP Pro dual-NIC embedded control processor — IPCP models only

Memory
- SDRAM ..... 512 MB
- Flash ..... 4.5 GB

Software and control options
- Software..... Extron Global Configurator® Plus and Professional for Windows®
- Control options..... GlobalViewer®, Extron control for iPad and web, or TouchLink Pro touchpanels, or eBUS® button panels

Ethernet control
- Network interface controllers (NICs) ..... 2: 1 LAN, 1 AV LAN
- Network switch ..... 1 AV unmanaged 3 port switch
- Connectors ..... LAN: 1 female RJ-45 connector
AV LAN: 3 female RJ-45 connectors
- Data rate ..... 10/100/1000Base-T, half/full duplex with autodetect
- Protocols..... DHCP, DNS, HTTP, HTTPS, ICMP, NTP, SFTP, SMTP, SNMP, SSH, TCP/IP, UDP/IP
- Default settings
  - LAN ..... Link speed and duplex level = autodetected
IP address = 192.168.253.250
Subnet mask = 255.255.255.0
Gateway = 0.0.0.0
DHCP = off
DNS: 127.0.0.1
  - AV LAN..... Link speed and duplex level = autodetected
IP address = 192.168.254.250
Subnet mask = 255.255.255.0
Gateway = 0.0.0.0
DHCP server = disabled
DNS: 127.0.0.1
    - DHCP server disabled ... IP address = 192.168.254.250
DNS: 127.0.0.1
    - DHCP server enabled.... IP address = 192.168.254.1
Dynamic leased IP address pool = 192.168.254.100 - 192.168.254.149
Maximum lease count = 50
Lease time = 24 hours

Serial control
- Quantity/type..... 1 bidirectional RS-232, RS-422, RS-485 (port 1)
2 bidirectional RS-232 (ports 2 and 3)
- Connectors ..... (1) 3.5 mm captive screw connector, 5 pole
(2) 3.5 mm captive screw connectors, 3 pole
- Baud rate and protocol..... 300 to 115200 baud (9600 baud = default); 8 (default) or 7 data bits; 1 (default) or 2 stop bits; no parity (default), even, or odd parity

NOTE: The 5-pole ports support both hardware and software flow control.
The 3-pole ports support software flow control.
The default for both types of ports is no flow control.

Pin configurations, serial, 5-pole captive screw
- RS-232 (default)..... Pin 1 = Tx, 2 = Rx, 3 = Gnd, 4 = RTS, 5 = CTS
- RS-422..... Pin 1 = Tx-, 2 = Rx-, 3 = Gnd, 4 = Tx+, 5 = Rx+
- RS-485..... Pins 1 and 2 (tied together) = data-, 3 = Gnd, 4 and 5 (tied together) = data+

Pin configurations, serial, 3-pole captive screw ..... Pin 1 = Tx, 2 = Rx, 3 = Gnd

- Digital I/O control
  - Quantity/type ..... 4 digital input/output (configurable)
  - Connectors ..... (1) 3.5 mm captive screw connector, 5 pole
  - Digital inputs
    - Input voltage range ..... 0 to 24 VDC, clamped at +30 VDC
    - Input impedance ..... >10k ohms
    - Programmable pullup ..... 1k ohms to +5 VDC
    - Threshold low to high ..... >2.8 VDC
    - Threshold high to low ..... <2.0 VDC
  - Digital outputs ..... 250 mA sink from 24 VDC max.
  - Pin configurations ..... 1, 2, 3, 4 = digital I/Os 1, 2, 3, 4; 5 = Gnd
- IR/serial control
  - Quantity/type ..... 2 programmable: unidirectional RS-232 (±5 V), or TTL level (0 to 5 V) infrared (carrier and non-carrier) up to 300 kHz
  - Connector ..... (1) 3.5 mm captive screw connector, 5-pole
  - Baud rate and protocol (RS-232) ..... 300 to 115200 baud (9600 baud = default); 8 (default) or 7 data bits; 1 (default) or 2 stop bits; no parity (default), even, or odd parity
  - Pin configurations ..... For each port, pin 1 = signal, 2 = Gnd
  - IR output carrier frequency ..... 30 kHz to 300 kHz
- Relay control
  - Quantity/type ..... 4 normally open relays
  - Relay control connectors ..... (1) 3.5 mm captive screw connector, 6 pole
  - Relay control contact rating ..... 24 VDC, 1 A
- eBUS control
  - eBUS control ports ..... (1) 3.5 mm captive screw connector, 5 pole (uses 4 poles)
  - eBUS pin configuration ..... +V = +12 VDC; +S = + signal; -S = - signal; G = ground
  - Recommended cable type ..... Extron STP20-2/1000 or STP20-2P/1000 cable
  - Maximum system cable length 1000 feet (305 meters) sum total for the eBUS system, regardless of topology. Power injection may be required depending on system cabling topology and primary power supply wattage. See the eBUS Technology Reference Guide for details.
  - eBUS power output ..... 6 watts

General

- Power supply ..... Internal
Input: 100-240 VAC, 50-60 Hz
- Power consumption
  - Full load (amp output at 1/8 power)
    - IN1608 xi ..... 42 watts
    - All xi amplifier models except IPCP models ..... 67 watts
    - All xi IPCP models ..... 76 watts
  - Power save mode
    - IN1608 xi ..... <33 watts
    - All xi amplifier models except IPCP models ..... <42 watts
    - All xi IPCP models ..... <47 watts
- Remote power capability
  - HDBaseT mode ..... Supports up to two endpoints (two DTP Tx)
  - DTP mode ..... Supports up to three endpoints (two DTP Tx, one DTP Rx)
- Temperature/humidity ..... Storage: -40 to +158 °F (-40 to +70 °C) / 10% to 90%, noncondensing
Operating: +32 to +122 °F (0 to +50 °C) / 10% to 90%, noncondensing
- Cooling ..... Fans, air flows right to left (as viewed from front panel)

Fan noise	<37 dB(A) at 1 m
Thermal dissipation	
Full load (amp output at 1/8 power)	
IN1608 xi	123 BTU/hr
All xi amplifier models except IPCP models	149 BTU/hr
All xi IPCP models	179 BTU/hr
Power save mode	
IN1608 xi	<94 BTU/hr
All xi amplifier models except IPCP models	<110 BTU/hr
All xi IPCP models	<144 BTU/hr
Mounting	
Rack mount	Yes, with included, pre-installed brackets
Enclosure type	Metal
Enclosure dimensions	
IN1608 xi	1.72" H x 17.5" W x 9.5" D (1U high, full rack wide) (44 mm H x 444 mm W x 241 mm D) (Depth excludes connectors and knobs. Width excludes rack ears.)
All other models	3.47" H x 17.5" W x 9.5" D (2U high, full rack wide) (88 mm H x 444 mm W x 241 mm D) (Depth excludes connectors and knobs. Width excludes rack ears.)
Product weight	
IN1608 xi	5.0 lbs (2.3 kg)
All amplifier models except IPCP models	7.4 lbs (3.4 kg)
All IPCP models	7.9 lbs (3.6 kg)
Regulatory compliance	CE, c-UL, UL, C-tick, FCC Class A, ICES, VCCI, RoHS, WEEE
Warranty	3 years parts and labor
Everlast power supply warranty	7 years parts and labor

NOTE: All nominal levels are at ±10%.

NOTE: Specifications are subject to change without notice.

NOTE: Shipping weights and dimensions are available at **www.extron.com**.

5327-D3

© 2017-2021 Extron Electronics All rights reserved. All trademarks mentioned are the property of their respective owners. **www.extron.com**

Cisco 110 Series Unmanaged Switches

© 2020 Cisco and/or its affiliates. All rights reserved.

Contents

Highlights	3
Product overview	3
Features	4
Specifications	5
Ordering information	9
Cisco limited lifetime warranty for Cisco Small Business products	10
Services for Small Business	10
Cisco environmental sustainability	10
Cisco Capital	11
For more information	11

Revise and Resubmit
Gary Adovnik, MFIA Inc.
06/15/2021

Indicate item being submitted

© 2020 Cisco and/or its affiliates. All rights reserved.

Affordable, Easy-to-Use Switches for Small Business Networks, with Zero Configuration Required

Highlights

- Affordable 10/100/1000-Mbps speeds for even the most bandwidth-hungry applications
- 5- to 24-port models that are desktop or rack mountable
- Power over Ethernet models to provide power to IP phones, access points, and other devices
- Works right out of the box: plug and play and no setup

Product overview

Give your office network a boost of speed and performance at a low price that takes almost no time to set up. Easily build a highly reliable network to connect your computers, printers, copiers, and other office equipment. If your business is like most small companies, you do not have an IT staff to set up your network for you. Now you can have a high-performance, business-class office network that just works, right out of the box, with the Cisco® 110 Series Unmanaged Switches. Users, workgroups, labs, departments, or growing offices can now deliver large amounts of multimedia, image, and video information across the network in almost no time.

Cisco 110 Series Unmanaged Switches deliver basic network connectivity and reliability for small businesses that is easy on the budget and without all the complexity. These switches provide all of the features, expandability, and investment protection you expect from Cisco, with no installation software and nothing to configure. Just plug it in, connect your computers and other business equipment, and get to work.

Cisco 110 Series Unmanaged Switches (Figure 1), part of the Cisco Small Business networking solutions, are a line of unmanaged switches that provide wire-speed Fast Ethernet and Gigabit Ethernet connectivity to connect your small business office. Available in desktop and rack-mount models, these switches are designed to suit any office space with basic network needs and to optimize power efficiency. They use less power and provide the robust, reliable connectivity your business demands, as well as support for advanced features such as Quality of Service (QoS), loop detection, and cable diagnostics, all in a switch that you can set up yourself in minutes. A business-class, affordable network solution, Cisco 110 Series switches bring the proven reliability and investment protection of Cisco networking solutions to your small business.

Figure 1.
Cisco 110 Series Unmanaged Switches

© 2020 Cisco and/or its affiliates. All rights reserved.

Features

Cisco 110 Series switches provide an easy-to-use solution for your small business network. They offer:

- **Ease of use:** Cisco 110 Series switches work right out of the box, with no software to install and nothing to configure. Each switch port independently sets itself for the optimal speed and determines whether to run in half- or full-duplex mode automatically. As a standards-based Cisco solution, Cisco 110 Series switches are also designed to immediately accommodate all of the devices in your network, including:
  - Support for 10 Megabits per second (Mbps), 100 Mbps, and up to 1 gigabit per second (1000 Mbps) devices in the same network
  - Automatic cable detection, so you do not have to worry about using the wrong cable type
  - Compatibility with network devices from other vendors
- **Simple setup:** Designed for small office spaces, Cisco 110 Series switches are available in both compact desktop and rack-mount models. The desktop models offer a wall-mount option for discreet mounting under a desk or on the wall of an office or conference room.
- **High performance:** Cisco 110 Series switches deliver the performance you need to run your business applications, including bandwidth-intensive video services, and avoid slow and sluggish networks. They support Gigabit Ethernet speeds, unlocking a new level of capacity and performance in your business network and letting you transfer large files in seconds.
- **Reduced energy costs:** Cisco 110 Series switches are designed to help conserve energy by optimizing power use without compromising performance, which protects our environment and reduces your energy costs. In addition, they support the Energy Efficient Ethernet (IEEE 802.3az) standard, which reduces energy consumption by monitoring the amount of traffic on an active link and putting the link into a sleep state during quiet periods. Most of the switches have no fans, so they run silently and unobtrusively while lowering energy costs.
- **Power over Ethernet (PoE):** Cisco 110 Series switches are available with PoE ports on both Fast Ethernet and Gigabit Ethernet models. This capability simplifies the deployment of IP telephony, wireless, video surveillance, and other solutions by allowing you to connect and power network endpoints over a single Ethernet cable. With no need to install separate power supplies for IP phones or wireless access points, you can take advantage of advanced communications technologies more quickly and at a lower cost.
- **Support for advanced technologies:** All switches include advanced Cisco traffic-handling features to keep your applications running at peak performance. Integrated QoS intelligence on all models automatically prioritizes delay-sensitive services such as voice or video to improve your network's performance. Loop detection helps discover loops in the network that you might have accidentally created, thus avoiding broadcast storms that will bring your network to a stall. Cable diagnostics help to quickly identify and troubleshoot network cabling faults and issues. Fast store-and-forward switching identifies damaged packets and prevents them from being passed on through the network. All of these features run automatically, with no management or configuration required.
- **Peace of mind:** Cisco 110 Series switches deliver the rock-solid reliability you expect from a Cisco switch. The solution has been rigorously tested to make sure of optimal uptime and performance. In addition, the limited lifetime hardware warranty provides peace of mind.

© 2020 Cisco and/or its affiliates. All rights reserved.

Specifications

Table 1 lists the specifications, package contents, and minimum requirements for the Cisco 110 Series.

Table 1. Specifications for Cisco 110 Series Switches

Specifications	Description
Standards	IEEE 802.3 10BASE-T Ethernet, IEEE 802.3u 100BASE-TX Fast Ethernet, IEEE 802.3ab 1000BASE-T Gigabit Ethernet, IEEE 802.3z Gigabit Ethernet, IEEE 802.3x Flow Control, 802.1p priority, Energy Efficient Ethernet, 802.3af, Power over Ethernet
Cabling type	Category 5e or better
LED indicators	System/PWR, link/activity, 100M,*PoE, *Max PoE, cable diagnostics, loop detection, gigabit,* mini-GBIC* *if present
Physical Interfaces	
Ports	10/100/1000 Ethernet, with support for 802.3af PoE, power port for AC adapter or power cord
Power supply	SF110D-05, SF110D-08: DC 12V, 500mA SF110D-16, SG110D-08, SG110D-05: DC 12V, 1.0A SF110D-08HP, SG110D-8HP: DC 48V. 1.25A SF110-16, SF110D-16HP, SF110-24, SF112-24, SG110-16, SG110-16HP, SG110-24, SG110-24HP, SG112-24: 110-240VAC, 50-60 Hz, internal, universal
Lock slot	Slot for Kensington lock
Physical Specifications	
Physical dimensions (W x D x H)	SF110D-05: 4.33 x 2.95 x 1.18 inches (110 x 75 x 30 mm) SF110D-08: 6.30 x 3.54 x 1.18 inches (160 x 90 x 30 mm) SF110D-08HP: 6.30 x 5.06 x 1.18 inches (160 x 129 x 30 mm) SF110D-16: 6.30 x 3.54 x 1.73 inches (160 x 90 x 44 mm) SF110-16: 11 x 6.69 x 1.73 inches (279 x 170 x 44 mm) SF110D-16HP: 6.30 x 3.54 x 1.73 inches (160 x 90 x 44 mm) SF110-24: 11 x 6.69 x 1.73 inches (279 x 170 x 44 mm) SF112-24: 17.32 x 7.97 x 1.73 inches (440 x 203 x 44 mm) SG110D-05: 4.33 x 2.95 x 1.18 inches (110 x 75 x 30 mm) SG110D-08: 6.30 x 4.07 x 1.18 inches (160 x 104 x 30 mm) SG110D-08HP: 6.30 x 5.06 x 1.18 inches (160 x 129 x 30 mm) SG110-16: 11 x 6.7 x 1.73 inches (279 x 170 x 44 mm) SG110-16HP: 11 x 6.7 x 1.73 inches (279 x 170 x 44 mm) SG110-24: 17.32 x 7.97 x 1.73 inches (440 x 203 x 44 mm) SG110-24HP: 17.32 x 7.97 x 1.73 inches (440 x 203 x 44 mm) SG112-24: 11 x 6.7 x 1.73 inches (279.4 x 170 x 44 mm)

© 2020 Cisco and/or its affiliates. All rights reserved.

Specifications	Description
Weight	SF110D-05: 1.01 lb. (0.46 kg) SF110D-08: 1.39 lb. (0.63 kg) SF110D-08HP: 1.08 lb. (0.49 kg) SF110D-16: 0.99 lb. (0.45 kg) SF110-16: 2.54 lb. (1.15 kg) SF110D-16HP: 3.00 lb. (1.36 kg) SF110-24: 2.14 lb. (0.97 kg) SF112-24: 4.25 lb. (1.93 kg) SG110D-05: 0.51 lb. (0.23 kg) SG110D-08: 0.95 lb. (0.43 kg) SG110D-08HP: 1.12 lb. (0.51 kg) SG110-16: 2.14 lb. (0.97 kg) SG110-16HP: 2.87 lb. (1.30 kg) SG110-24: 5.80 lb. (2.63 kg) SG110-24HP: 6.57 lb. (2.98 kg) SG112-24: 3.42 lb. (1.55 kg)
Ports	SF110D-05: 5 RJ-45 connectors for 10BASE-T/100BASE-TX SF110D-08: 8 RJ-45 connectors for 10BASE-T/100BASE-TX SF110D-08HP: 8 RJ-45 connectors for 10BASE-T/100BASE-TX; SF110D-16: 16 RJ-45 connectors for 10BASE-T/100BASE-TX SF110D-16HP: 16 RJ-45 connectors for 10BASE-T/100BASE-TX SF110-16: 16 RJ-45 connectors for 10BASE-T/100BASE-TX SF110-24: 24 RJ-45 connectors for 10BASE-T/100BASE-TX SF112-24: 24 RJ-45 connectors for 10BASE-T/100BASE-TX; with 2 combo mini-GBIC slots SG110D-08: 8 RJ-45 connectors for 10BASE-T/100BASE-TX/1000BASE-T ports SG110D-08HP: 8 RJ-45 connectors for 10BASE-T/100BASE-TX/1000BASE-T ports SG110-16: 16 RJ-45 connectors for 10BASE-T/100BASE-TX/1000BASE-T ports SG110-16HP: 16 RJ-45 connectors for 10BASE-T/100BASE-TX/1000BASE-T ports SG110-24: 24 RJ-45 connectors for 10BASE-T/100BASE-TX/1000BASE-T ports with 2 combo mini-GBIC slots SG110-24HP: 24 RJ-45 connectors for 10BASE-T/100BASE-TX/1000BASE-T ports with 2 combo mini-GBIC slots SG112-24: 24 RJ-45 connectors for 10BASE-T/100BASE-TX/1000BASE-T ports with 2 combo mini-GBIC slots All units: automatic Medium Dependent Interface (MDI) and MDI crossover (MDI-X); autonegotiated port for connecting 10-, 100-, 1000-Mbps devices

© 2020 Cisco and/or its affiliates. All rights reserved.

Specifications	Description		
Power over Ethernet (PoE)	**Model Name**	**Power Dedicated to PoE**	**Number of PoE Ports**
	SF110D-08HP	32 watts	4
	SF110D-16HP	64 watts	8
	SG110D-08HP	32 watts	4
	SG110-16HP	64 watts	8
	SG110-24HP	100 watts	12
Fan/fanless models	All models have no fans and are fanless, except for SG100-24HP		
Performance			
Switching capacity	SF110D-05: 1 Gbps SF110D-08: 1.6 Gbps SF110D-08HP: 1.6 Gbps SF110D-16: 3.2 Gbps SF110-16: 3.2 Gbps SF110D-16HP: 3.2 Gbps SF110-24: 4.8 Gbps SF112-24: 8.8 Gbps SG110D-05: 10 Gbps SG110D-08: 16 Gbps SG110D-08HP: 16 Gbps SG110-16: 32 Gbps SG110-16HP: 32 Gbps SG110-24: 48 Gbps SG110-24HP: 48 Gbps SG112-24: 48 Gbps		
Forwarding capacity	Forwarding rate in million packets per second (mpps) (based on 64-byte packets): SF110D-05: 0.74 mpps SF110D-08: 1.4. mpps S110D-08HP: 1.2 mpps SF110D-16: 1.4 mpps SF110-16: 1.4 mpps SF110D-16HP: 1.4 mpps SF110-24: 3.6 mpps SF112-24: 6.5 mpps SG110D-05: 7.4 mpps SG110D-08: 11.9 mpps SG110D-08HP: 11.9 mpps		

© 2020 Cisco and/or its affiliates. All rights reserved.

Specifications	Description
	SG110-16: 23.8 mpps SG110-16HP: 23.8 mpps SG110-24: 35.7 mpps SG110-24HP: 35.7 mpps SG112-24: 35.7 mpps
Capabilities	
Head-of-line (HOL) blocking	HOL blocking prevention
Jumbo frame	9216 bytes
Quality of service (QoS)	802.1p priority based, 4 hardware queues, priority queuing and Weighted Round-Robin (WRR)
Loop detection	Helps discover loops in the network to avoid broadcast storms
Cable diagnostics	Quickly identify and troubleshoot network cable faults and/or shorts
Mounting and Physical Security	
Mounting options	Desktop or rack mount
Physical security lock	Kensington lock slot
Environmental	
Compliance/ certifications	UL (UL 60950), CSA (CSA 22.2), CE mark, FCC Part 15 (CFR 47) Class A, FCC Class B* *select models
Operating temperature	32° to 104°F (0° to 40°C)
Storage temperature	-4° to 158°F (-20° to 70°C)
Operating humidity	10% to 90%, relative, noncondensing
Storage humidity	5% to 90%, relative, noncondensing
Package Contents	
• Cisco 110 Series switch • Power cord/power adapter • Quick-start guide • Mounting hardware	
Minimum Requirements	
• Devices supporting 802.3 Ethernet, 802.u Faster Ethernet, or 802.3ab Gigabit Ethernet • Cat5 or better Ethernet cable • Network interface card for each computer	

© 2020 Cisco and/or its affiliates. All rights reserved.

Specifications	Description
Warranty	
Cisco 110 Series switch	Limited lifetime

Ordering information

Table 2 gives ordering information for the Cisco 110 Series Unmanaged Switches.

Table 2. Ordering information for Cisco 110 Series Unmanaged Switches

Part Number	Description
SF110D-05-xx	Cisco SF110D-05 - 5-Port 10/100 Desktop Switch
SF110D-08-xx	Cisco SF110D-08 8-port 10/100 Desktop Switch
SF110D-08HP-xx	Cisco SF110D-08P 8-port 10/100 PoE Desktop Switch
SF110D-16-xx	Cisco SF110D-16 16-port 10/100 Desktop Switch
SF110D-16HP-xx	Cisco SF110D-16P 16-port 10/100 PoE Desktop Switch
SF110-16-xx	Cisco SF110-16 16-Port 10/100 Switch
SF110-24-xx	Cisco SF110-24 24-Port 10/100 Switch
SF112-24-xx	Cisco SF112-24 24-port 10/100 + 2 Mini-GBIC & 2 GE Uplink
SG110D-05-xx	Cisco SG110D-05 5-port Gigabit Desktop Switch
SG110D-08-xx	Cisco SG110D-08 8-Port Gigabit Switch
SG110D-08HP-xx	Cisco SG110D-08P 8-Port Gigabit PoE Switch
SG110-16-xx	Cisco SG110-16 16-Port Gigabit Switch
SG110-16HP-xx	Cisco SG110-16HP 16-Port PoE Gigabit Switch
SG112-24-xx	Cisco SG112-24 COMPACT 24-port Gig Switch-2 Mini-GBIC Ports
SG110-24-xx	Cisco SG110-24 24-port Gigabit Switch + 2 Mini GBIC Ports 1U
SG110-24HP-xx	Cisco SG110-24HP 24-Port PoE Gigabit Switch

The -xx in the Product Order ID Number is a country-/region-specific suffix. For example, the complete Product Order ID Number for SG110D-08 for the United States is SG110D-08-NA. Please refer to Table 3 for the correct suffix to use for your country/region.

© 2020 Cisco and/or its affiliates. All rights reserved.

Table 3. Country/region suffix for product order ID number

Suffix	Country/region
-NA	USA, Canada, Mexico, Colombia, Chile, and rest of Latin America
-BR	Brazil
-AR	Argentina
-EU	European Economic Area, Switzerland, Turkey, Russia, Ukraine, Israel, United Arab Emirates, Egypt, South Africa
-UK	United Kingdom, Saudi Arabia, Qatar, Kuwait
-AU	Australia, New Zealand
-JP	Japan

The products may also be available in countries or regions not listed above. Not all product models are offered in all countries/regions. Please consult with your local Cisco sales representative or Cisco partner for more details.

Cisco limited lifetime warranty for Cisco Small Business products

This Cisco Small Business product comes with a limited lifetime hardware warranty. Product warranty terms and other information applicable to Cisco products are available at https://www.cisco.com/go/warranty.

Services for Small Business

Reduce downtime with fast, expert technical support and flexible hardware coverage. Cisco Services improve network availability and help you get the most value from your Cisco products. Service plans for your Cisco Small Business products provide more support than a product warranty. A warranty protects you against product defects, and a majority of support calls are unrelated to faulty materials or manufacturing. Most callers ask about product features, technical problems, or how to expand their network.

Cisco offers an unlimited number of calls and no restrictions on call duration, so you can get the help you need and the most from your Cisco product.

For more information about Cisco Services, see https://www.cisco.com/go/sbs.

Cisco environmental sustainability

Information about Cisco's environmental sustainability policies and initiatives for our products, solutions, operations, and extended operations or supply chain is provided in the "Environment Sustainability" section of Cisco's Corporate Social Responsibility (CSR) Report.

Reference links to information about key environmental sustainability topics (mentioned in the "Environment Sustainability" section of the CSR Report) are provided in the following table:

© 2020 Cisco and/or its affiliates. All rights reserved.

Sustainability topic	Reference
Information on product material content laws and regulations	Materials
Information on electronic waste laws and regulations, including products, batteries, and packaging	WEEE compliance

Cisco makes the packaging data available for informational purposes only. It may not reflect the most current legal developments, and Cisco does not represent, warrant, or guarantee that it is complete, accurate, or up to date. This information is subject to change without notice.

Cisco Capital

Flexible payment solutions to help you achieve your objectives

Cisco Capital makes it easier to get the right technology to achieve your objectives, enable business transformation and help you stay competitive. We can help you reduce the total cost of ownership, conserve capital, and accelerate growth. In more than 100 countries, our flexible payment solutions can help you acquire hardware, software, services and complementary third-party equipment in easy, predictable payments. Learn more.

For more information

For more information about Cisco Small Business products and solutions, visit https://www.cisco.com/smallbusiness or https://www.cisco.com/go/110Switches.

Americas Headquarters
Cisco Systems, Inc.
San Jose, CA

Asia Pacific Headquarters
Cisco Systems (USA) Pte. Ltd.
Singapore

Europe Headquarters
Cisco Systems International BV Amsterdam,
The Netherlands

Cisco has more than 200 offices worldwide. Addresses, phone numbers, and fax numbers are listed on the Cisco Website at **https://www.cisco.com/go/offices**.

Cisco and the Cisco logo are trademarks or registered trademarks of Cisco and/or its affiliates in the U.S. and other countries. To view a list of Cisco trademarks, go to this URL: https://www.cisco.com/go/trademarks. Third-party trademarks mentioned are the property of their respective owners. The use of the word partner does not imply a partnership relationship between Cisco and any other company. (1110R)

Printed in USA C78-734450-02 09/20

© 2020 Cisco and/or its affiliates. All rights reserved.

TLP Pro 725M

7" WALL MOUNT TOUCHLINK PRO TOUCHPANEL

The Extron TLP Pro 725M is a 7" wall mount TouchLink® Pro Touchpanel with many enhanced features. Extron redesigned this latest TouchLink Pro Touchpanel inside and out with a new, high-performance quad-core processor, eight times more memory, a higher resolution, 1024x600 edge-to-edge glass capacitive touchscreen built with scratch and smudge-resistant Corning® Gorilla Glass®. The TLP Pro 725M also features the convenience of PoE - Power over Ethernet, which allows it to receive power and communication over a single Ethernet cable.

- **7" capacitive touchscreen with 1024x600 resolution and 24-bit color depth**
- **Newly designed inside and out for the ideal balance of performance and style**
- **Gorilla Glass® screen is tough, scratch, and smudge-resistant**
- **Faster, quad-core processing and eight times more memory**
- **Compatible with all IP Link Pro control processors**
- **Power over Ethernet provides power and communication over a single Ethernet cable**
- **Light sensor adjusts screen brightness as the ambient room lighting changes**

No Exception Taken
MFIA, Inc
Gary Adovnik
Checking is only for general conformance with the design concept of the project and general compliance with the information given in the contract documents. Any action shown is subject to the requirements of the plans and specifications. Contractor is responsible for: Dimensions, which shall be confirmed and correlated at the job site; fabrication processes and techniques of construction; coordination of his work with that of all other trades; and the satisfactory performance of his work.

06/15/2021

Extron

DESCRIPTION

The **TLP Pro 725M** is a 7" wall mount touchpanel that offers stellar performance and superior design. Inside, there's a powerful new quad-core processor and eight times more memory feeding the high resolution 1024 x 600 edge-to-edge glass capacitive touchscreen. The touchscreen, itself, is our most durable yet - built with scratch and smudge-resistant Corning Gorilla Glass. Outside you'll find a stylish, ergonomic enclosure that will complement any contemporary presentation environment.

A host of familiar features provides elegant, simple operation, while PoE, Power over Ethernet streamlines integration by allowing the touchpanel to receive power and communication over a single Ethernet cable.

All TouchLink Pro touchpanels can be customized using Extron GUI Designer software. This powerful interface design software offers ready-to-use templates for a wide variety of rooms and presentation environments.

PANEL DRAWINGS

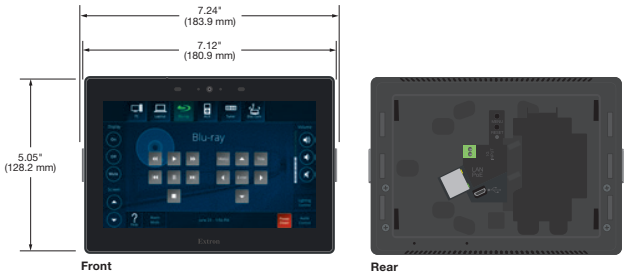

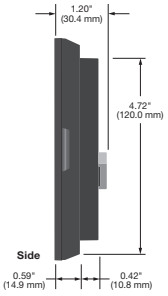

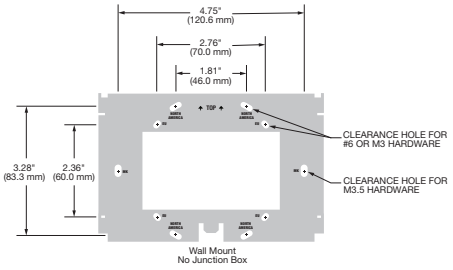

SPECIFICATIONS

DISPLAY	
Screen type	TFT Active matrix color LCD display
Size	7" (17.8 cm), measured diagonally
Resolution	1024x600
Aspect ratio	Widescreen
Color depth	24 bit, 16.7 million colors
Contrast	700:1
MEMORY	
SDRAM	2 GB
Flash	4 GB
COMMUNICATION — ETHERNET INTERFACE	
Ethernet data rate	10/100/1000Base-T, half/full duplex with autodetect
Ethernet protocol	DHCP, DNS, HTTP, HTTPS, ICMP, SFTP, SSH, TCP/IP, UDP/IP
Software	
Configuration software	Global Configurator Plus and Professional, GUI Designer
Programming software	Global Scripter
Control apps	Extron Control, iGVE
Resource management software	GlobalViewer Enterprise, iGVE
Utilities	Toolbelt, Embedded web page
CONTROL — USB	
Number/signal type	1 high-speed USB 2.0 device
USB standards	USB 2.0, USB 1.1, USB 1.0 compatible
AUDIO OUTPUT	
Speaker output	1 mono, 89 dB Max. SPL @ 0.1 m
Playback format(s)	
Container format	WAV (Microsoft RIFF)
Encoding	LPCM (uncompressed)
Audio channels	mono or stereo
GENERAL	
Power input requirements	Power over Ethernet (PoE 802.3af, class 3)
Auxiliary power output	
USB	5 VDC, 275 mA
Temperature/humidity	Storage: -4 to +158 °F (-20 to +70 °C) / 5% to 90%, noncondensing Operating: -4 to +158 °F (-20 to +70 °C) / 20% to 90%, noncondensing
Mounting	Wall, furniture, or rack
Enclosure dimensions	5.05" H x 7.24" W x 1.20" D (128 mm H x 184 mm W x 30 mm D)
Regulatory compliance	
Safety	CE, c-UL, UL
EMI/EMC	CE, C-tick,FCC Class B, ICES, VCCI
Environmental	Complies with the appropriate requirements of RoHS and WEEE.
Warranty	3 years parts and labor; touchpanel display and overlay components are covered for 1 year

Model	Version Description	Part number
TLP Pro 725M	Black - Wall Mount	60-1563-02
TLP Pro 725M	White - Wall Mount	60-1563-03

Optional Accessories

Model	Version Description	Part number
RM 5	Rack Mount Kit for TLP Pro 725M	70-1137-02
SMK 2	TLP Surface Mount Kit - Black	70-1140-22
SMK 2	TLP Surface Mount Kit - White	70-1140-23
RWM 2	TLP Recessed Wall Mount Kit	70-1141-23

For complete specifications, please go to www.extron.com
Specifications are subject to change without notice.

© 2018 Extron Electronics. All rights reserved. All trademarks mentioned are the property of their respective owners. Prices and specifications subject to change without notice.

03-2018
68-3238-01
REV. A
Letter - English - NP

We think you are currently located in United States - change your location? Change your location? Go to United States Select a different location (/)

Free Standard Delivery on all orders over £35

3000 Series Wireless Lavalier Microphone System

ATW-3211/831

£699.00 No reviews

Select Frequency Band

No Exception Taken
MFIA, Inc
Gary Adovnik
Checking is only for general conformance with the design concept of the project and general compliance with the information given in the contract documents. Any action shown is subject to the requirements of the plans and specifications. Contractor is responsible for: Dimensions, which shall be confirmed and correlated at the job site; fabrication processes and techniques of construction; coordination of his work with that of all other trades; and the satisfactory performance of his work.

06/15/2021

ATW-3211/831

Accessing our website tells us you agree to our use of cookies. However you can change your cookie settings at any time. Find out more (https://www.audio-technica.com/en-gb/privacy).

ATW-3211/831

ATW-R3210 receiver and ATW-T3201 body-pack transmitter with AT831cH cardioid condenser lavalier microphone.

(https://www.audio-technica.com/en-gb/media/catalog/product/cache/aee8318de9d8e245b6b604605849c7dc/a/t/atw-3211-831_01_25.png)

Features

Specifications

Overall System

Operating Frequencies

Band DE2: 470.125 to 529.975 MHz (2395 frequencies)
Band EE1: 530.000 to 589.975 MHz (2400 frequencies)
Band EF1: 590.000 to 649.975 MHz (2400 frequencies)
Band FG1: 650.000 to 699.875 MHz (1996 frequencies)

Accessing our website tells us you agree to our use of cookies. However you can change your cookie settings at any time. Find out more (https://www.audio-technica.com/en-gb/privacy).

Minimum Frequency Step

25 kHz

Modulation Mode

FM

Maximum Deviation

ATW-T3201: ±38 kHz (THD:10%)
ATW-T3202: ±36 kHz (THD:10%)

Frequency Response

ATW-T3201: 31 Hz to 15,500 Hz
ATW-T3202: 25 Hz to 16,700 Hz

Frequency response depends on attached microphone element

Operating Range

100 m (328')*Open range environment with no interfering signals.*

Total Harmonic Distortion

<1.0% (at 1 kHz, ±17.5 kHz deviation)

Operating Temperature Range

-5° C to +45° C (23° F to 113° F)

Simultaneous Use

40 Channels per band*

*For assistance with multi-band operation or other frequency coordination issues, please contact your regional Audio-Technica customer service representitive. *Region and band dependent*

Handheld Transmitter

RF Power Output

High: 30 mW, Low: 10 mW (switchable), at 50 ohms

Spurious Emissions

Following Federal and National Regulations

Battery Type

Two 1.5V AA, not included

Battery Life

High: 8.0 hours (alkaline), Low: 9.0 hours (alkaline)
High: 9.0 hours (Ni-MH 1900mAh), Low: 9.5 hours (Ni-MH 1900mAh)

Depending on battery type, usage, and environmental conditions.

Dimensions

ATW-T3202 (without capsule): 193 mm (7.60") long, 37 mm (1.46") maximum diameter
ATW-T3202/C510: 265 mm (10.43") long, 54 mm (2.13") maximum diameter
ATW-T3202/C710: 271 mm (10.67") long, 50 mm (1.97") maximum diameter

Accessing our website tells us you agree to our use of cookies. However you can change your cookie settings at any time. Find out more (https://www.audio-technica.com/en-gb/privacy).

Net Weight

ATW-T3202 (without capsule): 200 g (7.1 oz), without batteries
ATW-T3202/C510: 330 g (11.6 oz), without batteries
ATW-T3202/C710: 314 g (11.1 oz), without batteries

Body Pack

RF Power Output

High: 30 mW, Low: 10 mW (switchable), at 50 ohms

Battery Life

High: 8.0 hours (alkaline), Low: 9.0 hours (alkaline)
High: 9.0 hours (Ni-MH 1900mAh), Low: 9.5 hours (Ni-MH 1900mAh)

Depending on battery type, usage, and environmental conditions.

Battery Type

Two 1.5V AA, not included

Dimensions

64 mm x 82 mm x 23 mm (W x D x H)
2.52" x 3.22" x 0.91" (W x D x H)

Input Connections

cH-style screw-down 4-pin connector
Pin 1: GND
Pin 2: INST INPUT
Pin 3: MIC INPUT
Pin 4: DC BIAS +5V

Net Weight

102 g (3.6 oz), without batteries

Spurious Emissions

Following Federal and National Regulations

Receiver

Receiving System

True Diversity

Image Rejection

60 dB nominal

Maximum Output Level

XLR, balanced: +14 dBV
6.3 mm (1/4"), unbalanced: +8 dBV

Antenna Input

BNC-type, 50 ohms

Power Supply

100-240V AC (50/60 Hz) to 12V DC 1A (center positive) switched mode external power supply

Accessing our website tells us you agree to our use of cookies. However you can change your cookie settings at any time. Find out more (https://www.audio-technica.com/en-gb/privacy).

Dimensions

210.0 mm x 191.0 mm x 43.4 mm (W x D x H)
8.27" x 7.52" x 1.71" (W x D x H)

Weight

1100 g (38.8 oz), without accessories

Accessories Included

Two flexible UHF antennas; AC adapter (country dependent); rack-mount Adapters

Reviews

Downloads

Group Channel Table

Group Channel Table (https://www.audio-technica.com/media/wysiwyg/product/pdfs/eu/Wireless3000_Series_GroupChannelTable_web_191207.pdf)

ATW-T3201 Dimensions

ATW-T3201 Dimensions (https://www.audio-technica.com/media/wysiwyg/product/pdfs/eu/ATW-T3201_Dimensions.zip)

ATW-R3210 Dimensions

ATW-R3210 Dimensions (https://www.audio-technica.com/media/wysiwyg/product/pdfs/eu/ATW-R3210_Dimensions.zip)

3000 Series User Manual (ru)

3000 Series User Manual (ru) (https://www.audio-technica.com/media/wysiwyg/product/pdfs/eu/Wireless3000_UM_232416960_V2_RU_web_200324.pdf)

3000 Series User Manual (pt)

3000 Series User Manual (pt) (https://www.audio-technica.com/media/wysiwyg/product/pdfs/eu/Wireless3000_UM_232416960_V2_PT_web_200324.pdf)

3000 Series User Manual (it)

3000 Series User Manual (it) (https://www.audio-technica.com/media/wysiwyg/product/pdfs/eu/Wireless3000_UM_232416960_V2_IT_web_200324.pdf)

Accessing our website tells us you agree to our use of cookies. However you can change your cookie settings at any time. Find out more (https://www.audio-technica.com/en-gb/privacy).

Lowell™
Distributed Audio, Power & Rack Solutions

Heavy Duty, Sectional Wall Rack #LWR-1223

swing open wall rack with backbox
12U x 23"D x 23"W

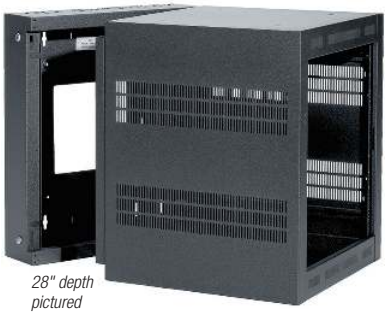

28" depth pictured

100% CERTIFIED US STEEL · MADE IN THE U.S.A. · c UL us LISTED UL 2416 · EIA TIA COMPLIANT · RoHS COMPLIANT

No Exception Taken

MFIA, Inc
Gary Adovnik

Checking is only for general conformance with the design concept of the project and general compliance with the information given in the contract documents. Any action shown is subject to the requirements of the plans and specifications. Contractor is responsible for: Dimensions, which shall be confirmed and correlated at the job site; fabrication processes and techniques of construction; coordination of his work with that of all other trades; and the satisfactory performance of his work.

features

- **Panel Space:** 12U or 21.00" [533]
- **Overall Height:** 27.125" [689]
- **Overall Depth:** 23.05" [585]
- **Usable Depth:** 20.00" [508], allowing partial extension of equipment into backbox
- **Overall Width:** 23.06" [586]
- **Description:** Wall rack features welded steel backbox and front mounting section. Ships in 2 cartons so backbox can be field installed while front is loaded at the shop.
- **Construction:** Welded 16-gauge certified U.S. steel. Black wrinkle powder epoxy finish.
- **Backbox:**
  - 5.80"D with keyhole mounting slots on 16" centers
  - 10"x10" opening accommodates electrical pull box
  - 1/4-20 ground stud
  - Embossed dimples on back plane for installation of board-mounted accessories
  - Removable top/bottom knockout panels with combination EKOs for conduit (1/2"–3/4" and 1"–1-1/2"). Upper KOs for wireless antennae (1/2"). Lower blank project panel.
  - Side locks (2) are keyed differently than optional door.
- **Front Mounting Section:**
  - 17.06"D, welded sides, fully gusseted corners, triple formed (side-to-bottom, side-to-top) wrap design mounts to backbox from inside with 2 heavy duty (self seating, positive locking) spring-loaded L-pins (move pins to change swing orientation). Strength equivalent to 3/16" steel. Front and side vents. Beveled front corners. Roller closure keeps front closed without mandatory locking.
  - Top/bottom KOs for wireless antennaes and integral rails on E.I.A. spacing for mounting or lacing.
  - Rack Rails: 1 pair (12U) 11-gauge steel rails with black finish, 10-32 threaded holes and numbered RU increments. Recessed 0.625"
- **Installation:** Minimum clearance to allow mounting section to swing open 90 degrees is 17.26" (+1" for optional door). Mounting section can swing open more than 90 degrees if room is provided.
- **Hardware:** Black pilot point screws with captive washers for quick installation.
- **Compliance:** EIA/TIA compliant. RoHS compliant. UL 2416 Listed in U.S. and Canada.
- **UL Listed Load Capacity:** 150 lbs.
- **Optional:**
  - Surface-mount front door: solid steel, fully-vented steel, or smoked plexiglass (#LFD-12, #LFD-12FV, #LFD-12P)
  - Additional pair of 12U mounting rails (#RRD-12)

06/15/2021

LWR series summary

Model No.	Rack Units	Overall Depth	Usable Depth*	Overall Height	Usable Height	Overall Width	Load Capacity	Front Corners	Adjustable Rails
LWR-719	7 U	19.05 [484]	16.00 [406]	18.38 [467]	12.25 [311]	23.06 [586]	125 lbs	Beveled	1 pr
LWR-1019	10 U	19.05 [484]	16.00 [406]	23.63 [600]	17.50 [445]	23.06 [586]	150 lbs	Beveled	1 pr
LWR-1219	12 U	19.05 [484]	16.00 [406]	27.13 [689]	21.00 [533]	23.06 [586]	150 lbs	Beveled	1 pr
LWR-1619	16 U	19.05 [484]	16.00 [406]	34.13 [867]	28.00 [711]	23.06 [586]	200 lbs	Beveled	1 pr
LWR-2119	21 U	19.05 [484]	16.00 [406]	42.88 [1089]	36.75 [933]	23.06 [586]	250 lbs	Beveled	1 pr
LWR-2419	24 U	19.05 [484]	16.00 [406]	48.13 [1223]	42.00 [1067]	23.06 [586]	300 lbs	Beveled	1 pr
LWR-3519	35 U	19.05 [484]	16.00 [406]	67.38 [1711]	61.25 [1556]	23.06 [586]	300 lbs	Beveled	1 pr
LWR-723	7 U	23.05 [585]	20.00 [508]	18.38 [467]	12.25 [311]	23.06 [586]	125 lbs	Beveled	1 pr
LWR-1023	10 U	23.05 [585]	20.00 [508]	23.63 [600]	17.50 [445]	23.06 [586]	150 lbs	Beveled	1 pr
LWR-1223	**12 U**	**23.05 [585]**	**20.00 [508]**	**27.13 [689]**	**21.00 [533]**	**23.06 [586]**	**150 lbs**	**Beveled**	**1 pr**
LWR-1623	16 U	23.05 [585]	20.00 [508]	34.13 [867]	28.00 [711]	23.06 [586]	200 lbs	Beveled	1 pr
LWR-2123	21 U	23.05 [585]	20.00 [508]	42.88 [1089]	36.75 [933]	23.06 [586]	250 lbs	Beveled	1 pr
LWR-2423	24 U	23.05 [585]	20.00 [508]	48.13 [1223]	42.00 [1067]	23.06 [586]	300 lbs	Beveled	1 pr
LWR-3523	35 U	23.05 [585]	20.00 [508]	67.38 [1711]	61.25 [1556]	23.06 [586]	300 lbs	Beveled	1 pr
LWR-1228	12 U	28.05 [712]	25.00 [635]	27.13 [689]	21.00 [533]	23.06 [586]	200 lbs	Squared	1 pr
LWR-1628	16 U	28.05 [712]	25.00 [635]	34.13 [867]	28.00 [711]	23.06 [586]	250 lbs	Squared	1 pr
LWR-2428	24 U	28.05 [712]	25.00 [635]	48.13 [1223]	42.00 [1067]	23.06 [586]	300 lbs	Squared	1 pr
LWR-1232	12 U	31.87 [809]	29.00 [737]	27.13 [689]	21.00 [533]	23.06 [586]	200 lbs	Squared	1 pr
LWR-1632	16 U	31.87 [809]	29.00 [737]	34.13 [867]	28.00 [711]	23.06 [586]	250 lbs	Squared	1 pr
LWR-2432	24 U	31.87 [809]	29.00 [737]	48.13 [1223]	42.00 [1067]	23.06 [586]	300 lbs	Squared	1 pr

**Usable Depth allows partial extension of equipment into backbox. Rack dimensions (rounded) – inches and [mm]; 1U = 1.75"*

Lowell strives to provide accurate information while reserving the right to change specifications and/or improve manufacturing methods without prior notification.
©2018 Lowell Manufacturing Co., 100 Integram Dr., Pacific MO 63069 / tel. 800.325.9660 / www.lowellmfg.com

Lowell™
Distributed Audio, Power & Rack Solutions

Heavy Duty, Sectional Wall Rack #LWR-1223

Dimensions are inches and [mm] unless stated otherwise.

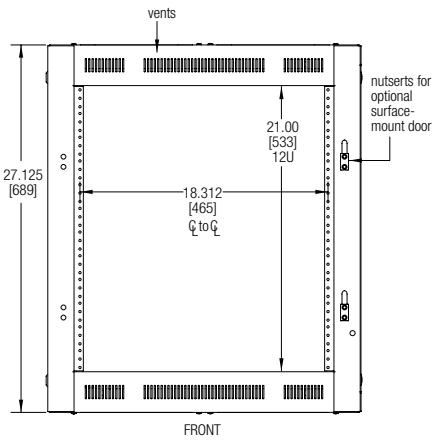

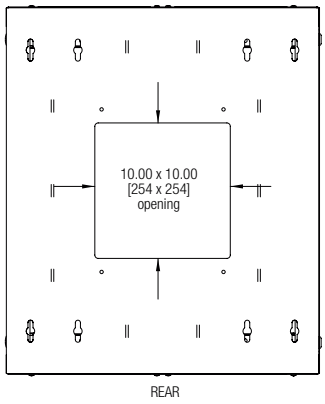

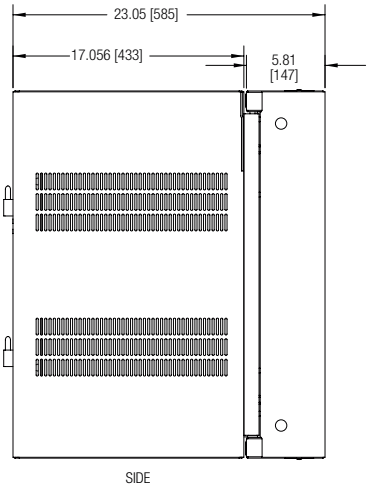

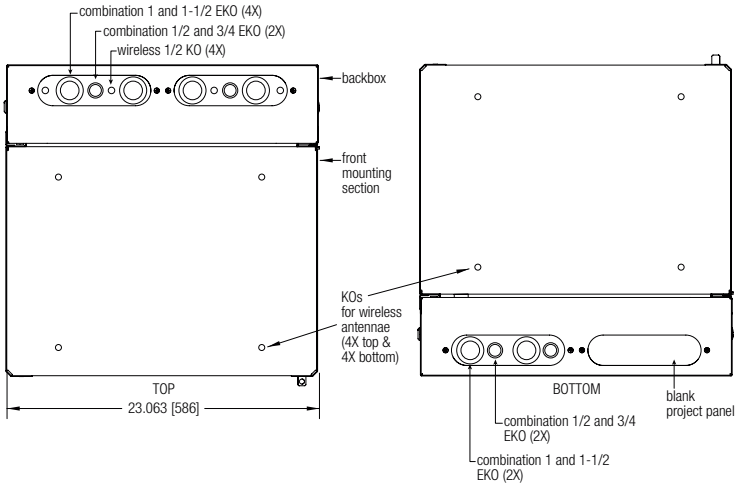

CORNER INSTALL DETAIL (23"D rack)

- Minimum clearance to open 90 degrees = 17.26"
- Allow additional 1" for optional door depth
- Allow sufficient clearance to access side locks (5")

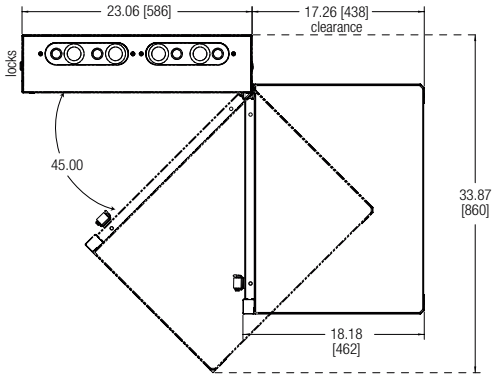

a&e specifications . . . . . .

The E.I.A. compliant, UL2416 listed, welded sectional wall rack shall be Lowell #LWR-1223, which shall consist of a backbox and mounting section made in the U.S.A. from 16 gauge certified U.S. steel. Overall measurements shall be 27.13"H x 23.05"D x 23.06"W , providing 12U panel space. The mounting section shall be 17.06"D with triple formed side-to-bottom, side-to-top wrapped construction to achieve strength equivalent to 3/16" thick steel. It shall feature side vents, one pair adjustable mounting rails tapped 10-32, four knockouts for antennas (top and bottom), and integral rails on E.I.A. spacing (top and bottom). The mounting section shall attach to the backbox on the inside with two heavy duty, spring-loaded L-pins (self seating, positive locking), which can be attached on either side to alter swing orientation. The backbox shall be 5.80"D with keyhole mounting slots on 16" centers, a 10"x 10" rear opening, embossed dimples and lacing points on the back plane, knockout panels with combination knockouts (1/2"–3/4", and 1–1-1/2"), a blank project panel, and two keyed side locks. The rack shall have a black wrinkle powder epoxy finish.

Optional

- The rack shall include a _____ (solid steel, fully-vented steel, smoked plexiglass) surface-mount front door _____ (Lowell #LFD-12, #LFD-12FV, #LFD-12P).
- The rack shall include an additional pair of mounting rails, Lowell #RRD-12.

Lowell strives to provide accurate information while reserving the right to change specifications and/or improve manufacturing methods without prior notification.
©2018 Lowell Manufacturing Co., 100 Integram Dr., Pacific MO 63069 / tel. 800.325.9660 / www.lowellmfg.com

VFR159i Specifications

FEATURES

- Two-way, full range loudspeaker
- Beamwidth-matching crossover point
- Large, user-rotatable horn for optimized pattern control
- Easy lift handles (Black version only)

DESCRIPTION

The new VFR "i" revision brings the VF concept more fully into the EAW product line.

The VFR159i two-way, full range loudspeaker system includes a direct-radiating, vented, 15-in LF cone transducer and a 1-in exit / 1.75-in voice coil HF compression driver loaded with a large, square, user-rotatable 90x60 or 60x45 coverage pattern horn built on the classic MK Series horns. These horns deliver exceptional high frequency dispersion, and their square shape lets users "rotate the enclosure around the horn" to maintain directivity in a horizontal configuration. The standard horn is field replaceable with an optional 60x45 horn. This change incorporates a passive filter adjustment to maintain consistent acoustic response and smooth beamwidth throughout the crossover region.

Because VF Series full range systems (VFR/VFM) use HF sections similar to those developed for the MK Series, EAW engineers could employ the same revolutionary "beamwidth-matching" internal passive crossover/filter networks that set the MK Series apart from all other two-way systems. If powered by an EAW-specified amplifier or via a UX Series digital signal processor, the VFR159i can enjoy the benefits of EAW Focusing, a technology that eliminates the anomalies inherent in the time domain of any loudspeaker.

The VFR159i black version includes traditional portable features such as a pole-mount cup, parallel NL4 4-terminal connector, barrier strip connector, an optional transformer and handles that accept accessory covers for permanent installation. The white, installation-only versions omit handles and the pole-mount cup but include NL4 connector, barrier strip connector, an optional transformer, and multiple mounting points. The new design leaves the enclosure sides completely smooth and attractive. Optional rigging hardware is available for preconfigured arrays with VFS sub bass systems.

Six year warranty.

2-WAY FULL-RANGE LOUDSPEAKER 90° × 60°

See *NOTES TABULAR DATA* for details

CONFIGURATION

Subsystem:

	Transducer	*Loading*
LF	1× 15-in cone	Vented
HF	1× 1-in exit, 1.75-in voice coil compression driver	Horn-loaded

Operating Mode:

	Amplifier Channels	*External Signal Processing*
Single-amp	LF/HF	High pass filter

PERFORMANCE

Operating Range: 54 Hz to 20 kHz

Nominal Beamwidth *(rotatable):*

Horz	90°
Vert	60°

Axial Sensitivity *(whole space SPL):*

LF/HF	98 dB	54 Hz to 20 kHz

Input Impedance *(ohms):*

	Nominal	*Minimum*
LF/HF	8	6.5 @ 130 Hz

Input Taps *(With ACC-TXVFR Transformer installed):*

	70V	*100V*
LF/HF	128W / 64W / 32W / 16W	128W / 64W / 32W

High Pass Filter: High Pass =>50 Hz, 12 dB/octave Butterworth

Accelerated Life Test:

LF/HF	69.3 V	600 W @ 8 ohm

Calculated Axial Output Limit *(whole space SPL):*

	Average	*Peak*
LF/HF	126 dB	132 dB

ORDERING DATA

Description	Part Number
EAW VFR159i Black	2041030-90
EAW VFR159i White	2041015-90
Optional Accessories	
EAW ACC TX VFR [ACC-TXVFR]	2039034
Eye Bolt Forged Shoulder M10 X 1.5 X 37mm	0029818
EAW U-Bracket V15U BLK [UBKT-V15U]	2038546
EAW U-Bracket V15U WHT [UBKT-V15U]	2039032
EAW Flybar SBK-MK53 VFS-VFR159 BLK [FB5VSK]	2038320
EAWC Kit Horn 60X45 [HK64VR]	0033364

No Exception Taken
MFIA, Inc
Gary Adovnik
Checking is only for general conformance with the design concept of the project and general compliance with the information given in the contract documents. Any action shown is subject to the requirements of the plans and specifications. Contractor is responsible for: Dimensions, which shall be confirmed and correlated at the job site; fabrication processes and techniques of construction; coordination of his work with that of all other trades; and the satisfactory performance of his work.

ENCLOSURE

Material Hardwood plywood
Finish Wear resistant textured black paint
Grille Powder-coated perforated steel

VFR159i BLACK

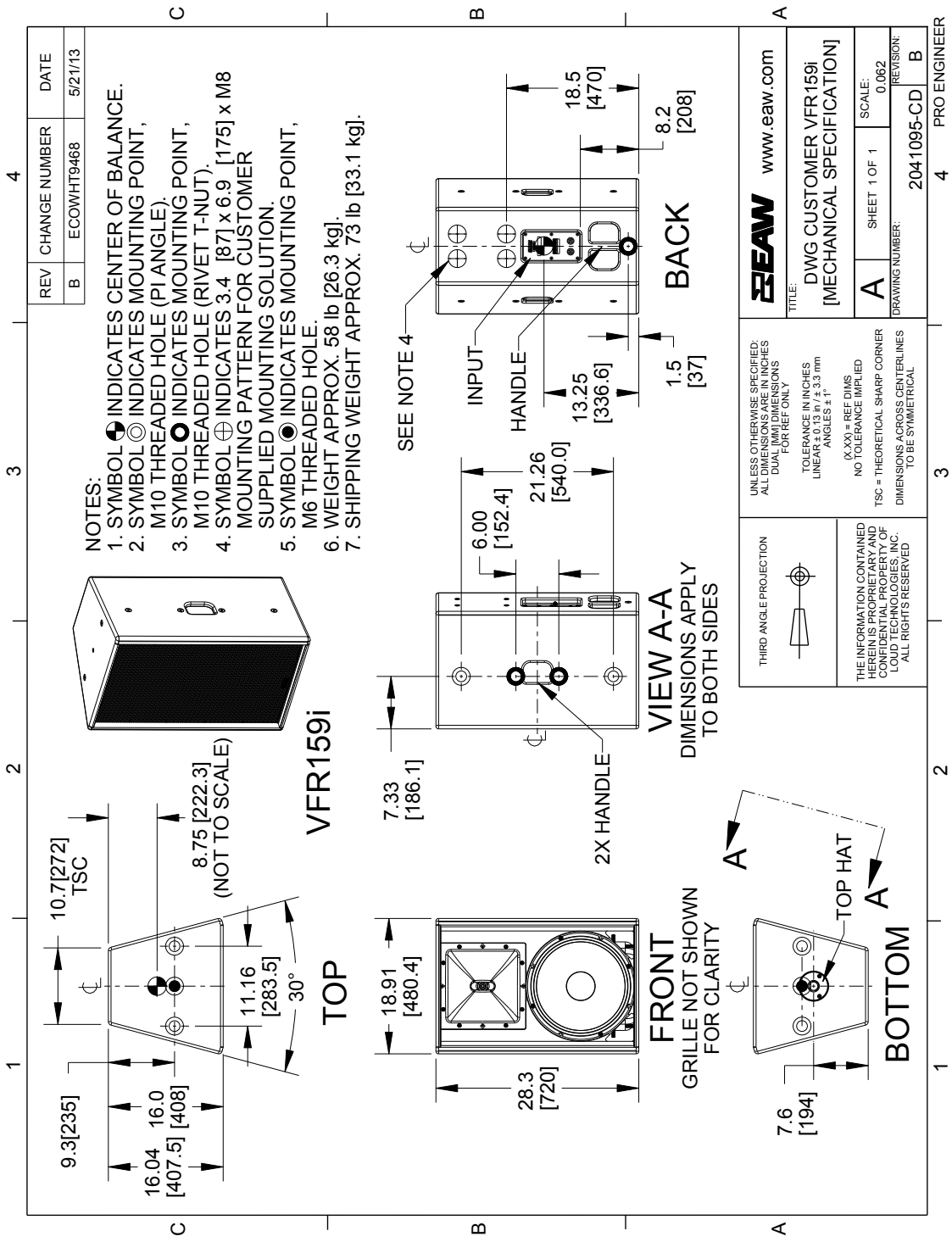

NOTE: This drawing has been reduced. Do not scale.

ENCLOSURE

Material Hardwood plywood
Finish Wear resistant textured white paint
Grille Powder-coated perforated steel

VFR159i WHITE

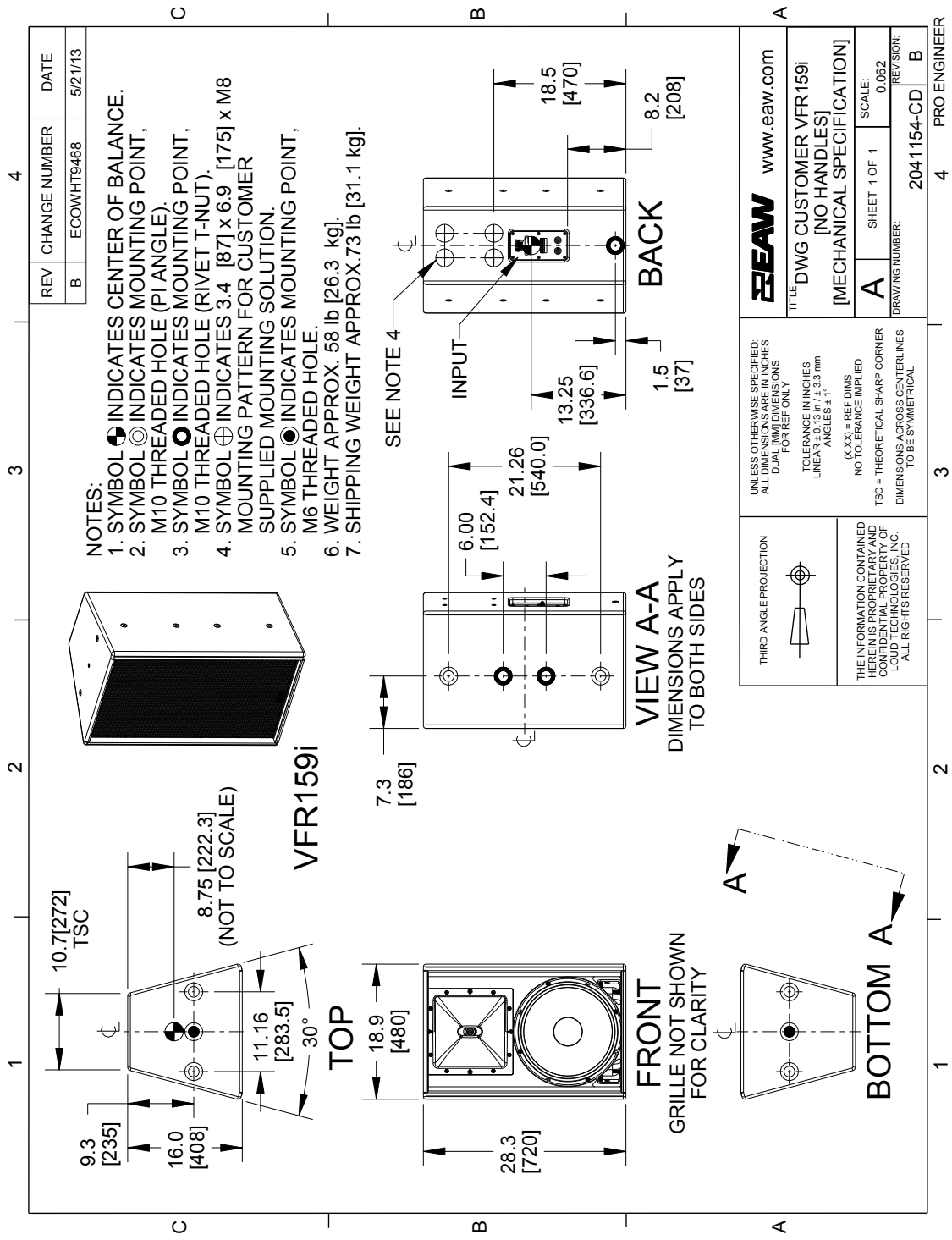

NOTE: This drawing has been reduced. Do not scale.

PERFORMANCE DATA

See *NOTES GRAPHIC DATA* for details

Frequency Response: Processed

Complete = blue

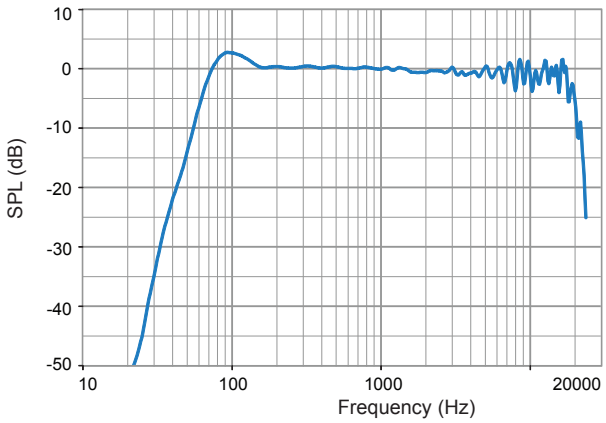

Frequency Response: Unprocessed

Complete = blue

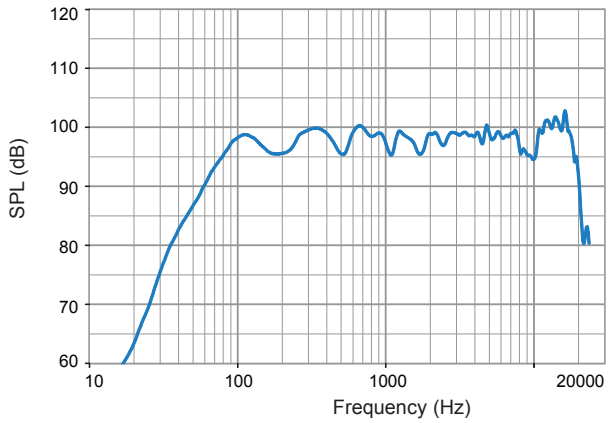

Impedance

Complete = blue

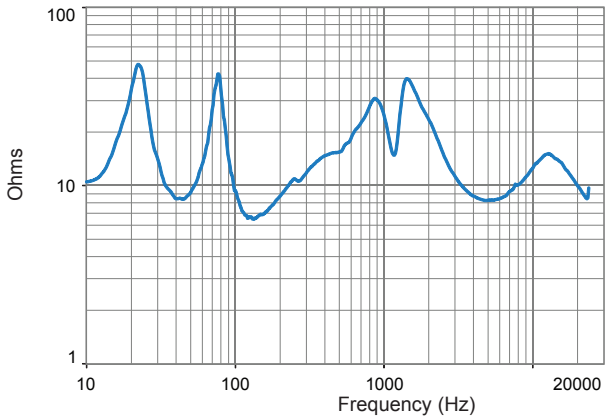

Phase Linearity

Complete = blue

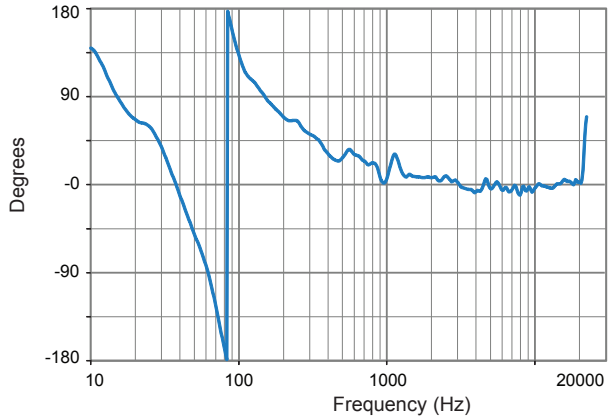

Beamwidth

Horizontal = orange Vertical = black

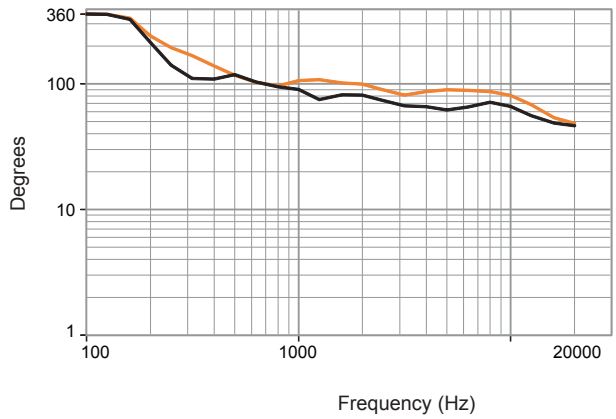

HORIZONTAL POLAR DATA

See *NOTES GRAPHIC DATA* for details

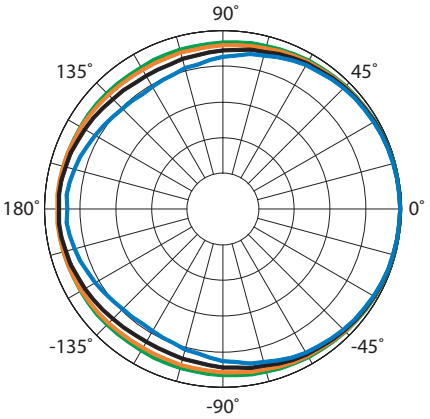

100Hz
125Hz
160Hz
200Hz

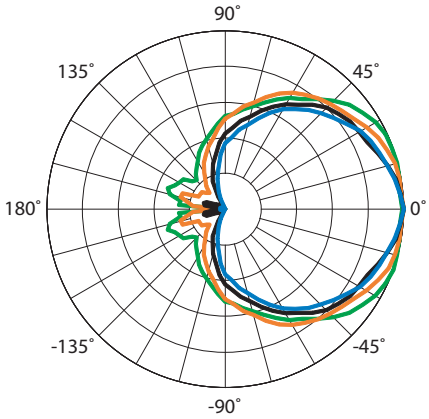

1600Hz
2000Hz
2500Hz
3150Hz

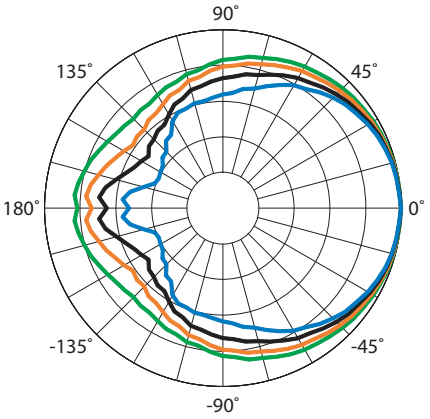

250Hz
315Hz
400Hz
500Hz

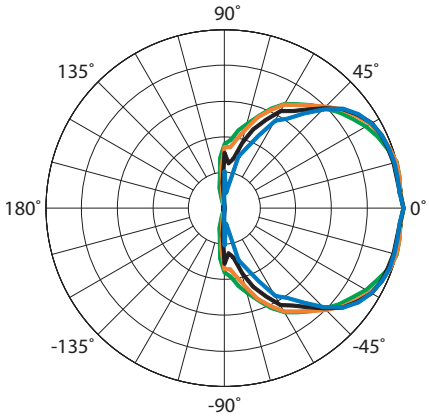

4000Hz
5000Hz
6300Hz
8000Hz

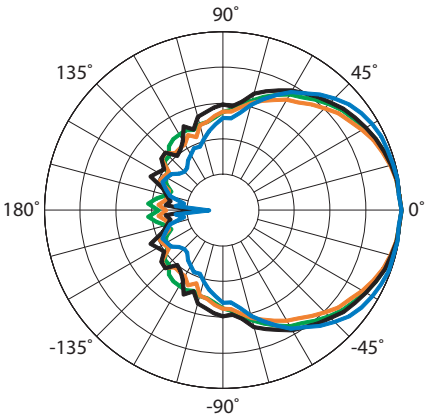

630Hz
800Hz
1000Hz
1250Hz

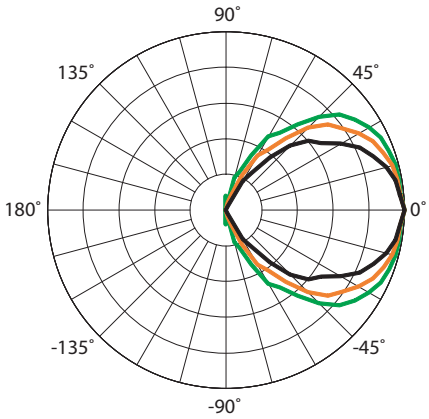

10000Hz
12500Hz
16000Hz

VERTICAL POLAR DATA

See *NOTES GRAPHIC DATA* for details

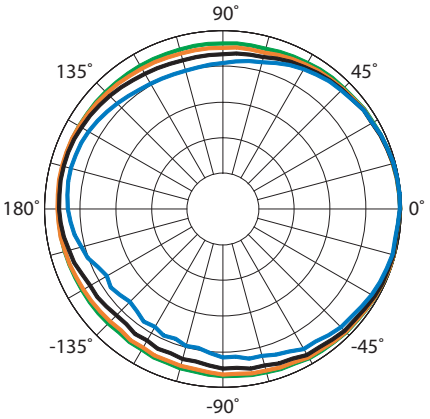

100Hz
125Hz
160Hz
200Hz

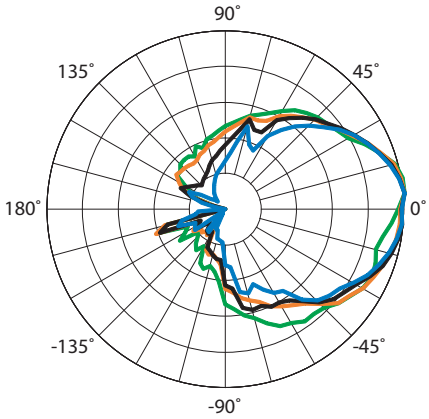

1600Hz
2000Hz
2500Hz
3150Hz

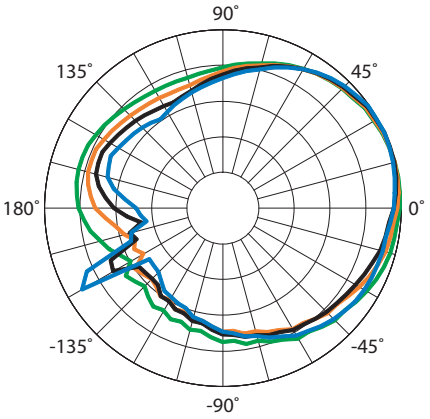

250Hz
315Hz
400Hz
500Hz

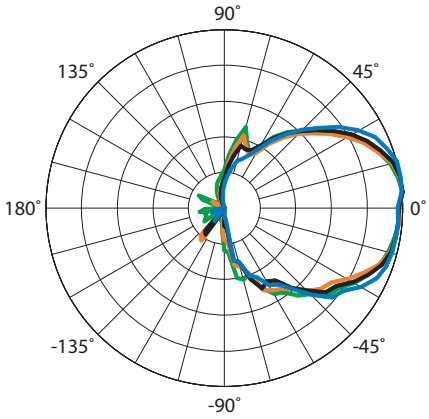

4000Hz
5000Hz
6300Hz
8000Hz

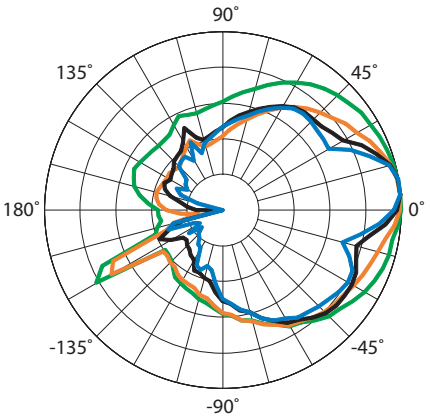

630Hz
800Hz
1000Hz
1250Hz

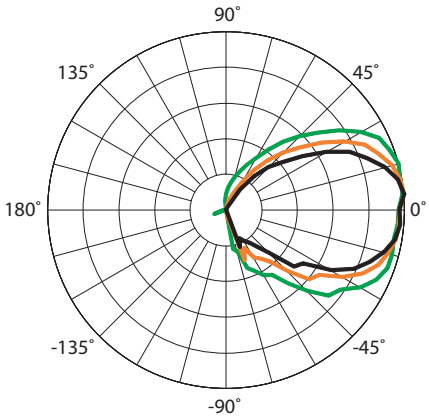

10000Hz
12500Hz
16000Hz

VFR159i Specifications

INPUT PANEL

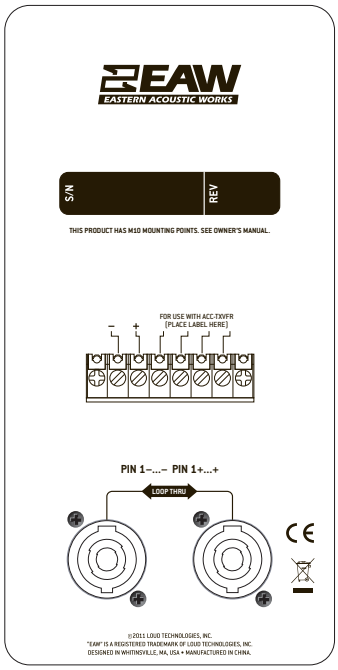

SIGNAL DIAGRAM

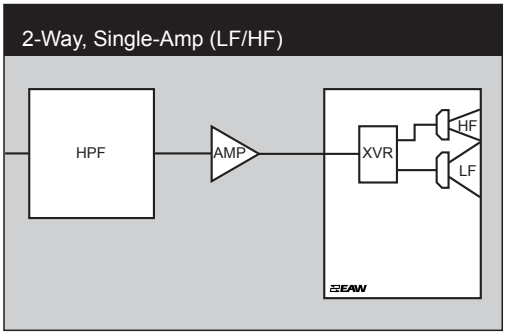

LEGEND

DSP:	EAW UX8800 Digital Signal Processor –or– Integral Digital Signal Processing for NT products.
HPF:	High Pass Filter for crossover –or– Recommended High Pass Filter.
LPF:	Low Pass Filter for crossover.
LF/MF/HF:	Low Frequency / Mid Frequency / High Frequency.
AMP:	User Supplied Power Amplifier –or– Integral Amplifier for NT products.
XVR:	Passive LPFs, HPFs, and EQ integral to the loudspeaker.
EAW Focusing:	Digital Signal Processor capable of implementing EAW Focusing.

NOTES

TABULAR DATA

1. **Measurement/Data Processing Systems:** Primary - FChart: proprietary EAW software; Secondary - Brüel & Kjær 2012.
2. **Microphone Systems:** Earthworks M30; Brüel & Kjær 4133
3. **Measurements:** Dual channel FFT; length: 32 768 samples; sample rate: 48 kHz; logarithmic sine wave sweep.
4. **Measurement System Qualification** (includes all uncertainties)**:** SPL: accuracy +/-0.2 dB @ 1 kHz, precision +/-0.5 dB 20 Hz to 20 kHz, resolution 0.05 dB; Frequency: accuracy +/-1 %, precision +/-0.1 Hz, resolution the larger of 1.5 Hz or 1/48 octave; Time: accuracy +/-10.4 µs, precision +/-0.5 µs, resolution 10.4 µs; Angular: accuracy +/-1°, precision +/-0.5°, resolution 0.5°.
5. **Environment:** Measurements time-windowed and processed to eliminate room effects, approximating an anechoic environment. Data processed as anechoic or fractional space, as noted.
6. **Measurement Distance:** 7.46 m. Acoustic responses represent complex summation of the subsystems at 20 m. SPL is referenced to other distances using the Inverse Square Law.
7. **Enclosure Orientation:** For beamwidth and polar specifications, as shown in Mechanical Specification drawing.
8. **Volts:** Measured rms value of the test signal.
9. **Watts:** Per audio industry practice, "loudspeaker watts" are calculated as voltage squared divided by rated nominal impedance. Thus, these are not True Watt units of energy as defined by International Standard.
10. **SPL:** (Sound Pressure Level) Equivalent to the average level of a signal referenced to 0 dB SPL = 20 microPascals.
11. **Subsystem:** This lists the transducer(s) and their acoustic loading for each passband. Sub = Subwoofer, LF = Low Frequency, MF = Mid Frequency, HF = High Frequency.
12. **Operating Mode:** User selectable configurations. Between system elements, a comma (,) = separate amplifier channels; a slash (/) = single amplifier channel. DSP = Digital Signal Processor. IMPORTANT: To achieve the specified performance, the listed external signal processing must be used with EAW-provided settings.
13. **Operating Range:** Range where the processed Frequency Response stays within -10 dB SPL of the power averaged SPL within this range; measured on the geometric axis. Narrow band dips are excepted.
14. **Nominal Beamwidth:** Design angle for the -6 dB SPL points, referenced to 0 dB SPL as the highest level.
15. **Axial Sensitivity:** Power averaged SPL over the Operating Range with an input voltage that would produce 1 W at the nominal impedance; measured with no external processing on the geometric axis, referenced to 1 m.
16. **Nominal Impedance:** Selected 4, 8, or 16 ohm resistance such that the minimum impedance point is no more than 20% below this resistance over the Operating Range.
17. **Accelerated Life Test:** Maximum test input voltage applied with an EIA-426B defined spectrum; measured with recommended signal processing and Recommended Protection Filter.
18. **Calculated Axial Output Limit:** Highest average and peak SPLs possible during the Accelerated Life Test. The Peak SPL represents the 2:1 (6 dB) crest factor of the Life Test signal.
19. **High Pass Filter:** This helps protect the loudspeaker from excessive input signal levels at frequencies below the Operating Range.

GRAPHIC DATA

1. **Resolution:** To remove insignificant fine details, 1/12 octave cepstral smoothing was applied to acoustic frequency responses and 1/3 octave cepstral smoothing was applied to the beamwidth and impedance data. Other graphs are plotted using raw data.
2. **Frequency Responses:** Variation in acoustic output level with frequency for a constant input signal. Processed: normalized to 0 dB SPL. Unprocessed inputs: 2 V (4 ohm nominal impedance), 2.83 V (8 ohm nominal impedance), or 4 V (16 ohm nominal impedance) referenced to a distance of 1 m.
3. **Processor Response:** The variation in output level with frequency for a constant input signal of 0.775 V = 0 dB reference.
4. **Beamwidth:** Average angle for each 1/3 octave frequency band where, starting from the rear of the loudspeaker, the output first reaches -6 dB SPL referenced to 0 dB SPL as the highest level. This method means the output may drop below -6 dB SPL within the beamwidth angle.
5. **Impedance:** Variation in impedance magnitude, in ohms, with frequency without regard to voltage/current phase. This means the impedance values may not be used to calculate True Watts (see 9 above).
6. **Polar Data:** Horizontal and vertical polar responses for each 1/3 octave frequency band 100 Hz to 16 kHz or Operating Range.

EN

QX1622USB

2-Track Out

Type	RCA connector
Impedance	1 kΩ
Max. output level	+22 dBu

DSP

Type	KLARK TEKNIK
Converter	24-bit Sigma-Delta
	64/128-times oversampling
Sampling rate	40 kHz

Wireless Input

USB dongle	Accepts signals from 2 independent Behringer ULM mics

Main Mix System Data (Noise)

Main mix @ -∞, channel fader @ -∞	-100 dB / -103 dB A-weighted
Main mix @ 0 dB, channel fader @ -∞	-88 dB / -91 dB A-weighted
Main mix @ 0 dB, channel fader @ 0 dB	-80 dB / -82 dB A-weighted

Power Supply

Mains voltage	100 – 240 V~, 50/60 Hz
Power consumption	50 W
Fuse (100 - 240 V~, 50/60 Hz)	T 1.6 A H 250 V
Mains connector	Standard IEC receptacle

USB

Connector	Type B
Audio	Stereo in/out
Converter	16-bit
Sample rate	48 kHz

Physical/Weight

Dimensions (W x D x H)	430 x 370 x 90 mm (16.9 x 14.6 x 3.5")
Weight	4.7 kg (10.4 lbs)

Microphone Inputs

XENYX Mic preamps	4
Type	XLR connector, balanced, discrete input circuit

Mic E.I.N. (20 Hz - 20 kHz)

@ 0 Ω source resistance	-134 dB / -136 dB A-weighted
@ 50 Ω source resistance	-131 dB / -133 dB A-weighted
@ 150 Ω source resistance	-129 dB / -131 dB A-weighted
Frequency response	<10 Hz - 150 kHz (-1 dB) <10 Hz - 200 kHz (-3 dB)
Gain range	+10 dB to +60 dB
Max. input level	+12 dBu @ +10 dB gain
Impedance	2 kΩ balanced
Signal-to-noise ratio	107 dB / 110 dB A-weighted (0 dBu In @ +22 dB gain)
Distortion (THD+N)	0.005% / 0.004% A-weighted
Phantom power	Switchable, +48 V

Line Input

Type	¼" TRS connector, balanced
Impedance	20 kΩ balanced, 10 kΩ unbalanced
Gain range	-10 dB to +40 dB
Max. input level	30 dBu

Frequency Response (Mic In → Main Out)

<10 Hz - 160 kHz	±3 dB

Stereo Inputs

Type	4 x ¼" TRS connector, balanced
Impedance	20 kΩ balanced, 10 kΩ unbalanced
Gain range	-20 dB to +20 dB
Max. input level	+22 dBu

2-Track In

Type	RCA connector
Impedance	10 kΩ
Max. input level	+22 dBu

Equalizer 3-Band Semi-Parametric

Low	80 Hz / ±15 dB
Mid	Variable 100 Hz - 8 kHz / ±15 dB
High	12 kHz / ±15 dB

No Exception Taken
MFIA, Inc
Gary Adovnik
Checking is only for general conformance with the design concept of the project and general compliance with the information given in the contract documents. Any action shown is subject to the requirements of the plans and specifications. Contractor is responsible for: Dimensions, which shall be confirmed and correlated at the job site; fabrication processes and techniques of construction; coordination of his work with that of all other trades; and the satisfactory performance of his work.
06/15/2021

EN

Equalizer 4-Band Fixed	
Low	80 Hz / ±15 dB
Low mid	500 Hz / ±15 dB
High mid	3 kHz / ±15 dB
High	12 kHz / ±15 dB

Channel Inserts	
Type	¼" TRS connector, unbalanced
Max. input level	+22 dBu

AUX Sends	
Type	2 x ¼" TRS connector, balanced
Impedance	120 Ω
Max. output level	+22 dBu

AUX Returns	
Type	2 x ¼" TRS connector, balanced
Impedance	20 kΩ balanced, 10 kΩ unbalanced
Max. input level	+22 dBu

Main Outputs	
Type	XLR and ¼" connectors, balanced
Impedance	240 Ω balanced, 120 Ω unbalanced
Max. output level	+28 dBu

Control Room Output	
Type	¼" TRS connector, balanced
Impedance	120 Ω
Max. output level	+22 dBu

Phones Output	
Type	¼" TRS connector, unbalanced
Impedance	25 Ω
Max. output level	+21 dBu / 150 Ω (+25 dBm)

2-Track Out	
Type	RCA connector
Impedance	1 kΩ
Max. output level	+22 dBu

DSP	
Type	KLARK TEKNIK
Converter	24-bit Sigma-Delta
	64/128-times oversampling
Sampling rate	40 kHz

Wireless Input	
USB dongle	Accepts signals from 2 independent Behringer ULM mics

Main Mix System Data (Noise)	
Main mix @ -∞, channel fader @ -∞	-100 dB / -102 dB A-weighted
Main mix @ 0 dB, channel fader @ -∞	-88 dB / -91 dB A-weighted
Main mix @ 0 dB, channel fader @ 0 dB	-82 dB / -85 dB A-weighted

Power Supply	
Mains voltage	100 – 240 V~, 50/60 Hz
Power consumption	50 W
Fuse (100 - 240 V~, 50/60 Hz)	T 1.6 A H 250 V
Mains connector	Standard IEC receptacle

USB	
Connector	Type B
Audio	Stereo in/out
Converter	16-bit
Sample rate	48 kHz

Physical/Weight	
Dimensions (W x D x H)	325 x 348 x 90 mm (12.8 x 13.7 x 3.5")
Weight	3.5 kg (7.7 lbs)

Asio is a trademark or registered trademark of Steinberg Media Technologies GmbH.

Wireless Microphone Systems

ULTRALINK USB Wireless Microphones ULM200USB/ULM100USB

ULTRALINK ULM200USB — High-Performance 2.4 GHz Digital Wireless Dual Microphone System

- High-performance 2.4 GHz digital wireless microphone system with 2 handheld microphones and USB receiver

ULTRALINK ULM200USB — High-Performance 2.4 GHz Digital Wireless Microphone System

- High-performance 2.4 GHz digital wireless microphone system with handheld microphone and USB receiver

Common Features

- License-free 2.4 GHz band wireless technology
- Automatic pairing for easy and intuitive setup
- Manual pairing for new or replacement microphones
- Dual mode analog/USB class-compliant digital audio interface with automatic sensing
- Robust error detection and correction provides high rejection of interference
- Integrated volume up and down buttons on handheld microphone for easy volume control
- Panic mute function
- Low battery Indication
- Multifunction LED status indication
- Receiver dongle powered via USB interface
- High-quality components and exceptionally rugged construction ensure long life
- Conceived and designed by BEHRINGER Germany

Once again BEHRINGER breaks the affordability barrier—with the new ULTRALINK ULM Series USB Wireless Microphone Systems. Now you are free to work the room to your heart's content, without the hassle and restriction of cables underfoot. Highest-quality sound is provided by the dynamic hand-held mic thanks to its built-in transmitter, which operates in the license-free 2.4 GHz range. And because the receiver can be connected directly to your PC/Mac computer's USB port, you can record directly into your favorite DAW application.

Interference-Free Performance

Our state-of-the-art transmitters and receivers operate in the 2.4 GHz frequency band, which is well out of the way of TV stations and cell phone towers, two of the main culprits that wreak havoc in the wireless zone. And because it is digitally encrypted, your signal gets through in all its pristine, high-definition quality, without the random artifacts that often plague other wireless systems.

Extended Battery Life

Replacing batteries in wireless mics can get expensive really fast—and having them die in the middle of your set can be a showstopper! That's why we devoted extra time in developing ULM USB Series, ensuring that battery life is extended as long as possible. You get an honest 8 hours performance time from a pair of AA alkaline batteries, which are available virtually anywhere on the planet.

Continued on next page

Revise and Resubmit
Gary Adovnik, MFIA Inc.
Does not match specification
or district standards
06/15/2021

behringer

ULTRALINK USB Wireless Microphones ULM200USB ULM100USB

Convenient Control

It can be a real hassle running back and forth to get your volume set just right, so we put easy-to-operate Volume Up and Down buttons right on the microphone body. And should you accidentally wander into the "Feedback Zone", we've included a handy Panic Mute function that engages when you press and hold the Volume Down button.

Ready for the World

Operating in the 2.4 GHz band allows BEHRINGER ULM Series USB Wireless Microphone Systems to be used across the globe without any special licensing requirements.

Extraordinary Value

ULM Series USB Wireless Microphone Systems are only available from BEHRINGER, the premier audio manufacturer recognized worldwide for outstanding build quality and exceptional value. Visit your local authorized dealer today and see just how easy and affordable it is to hop on the wireless bandwagon.

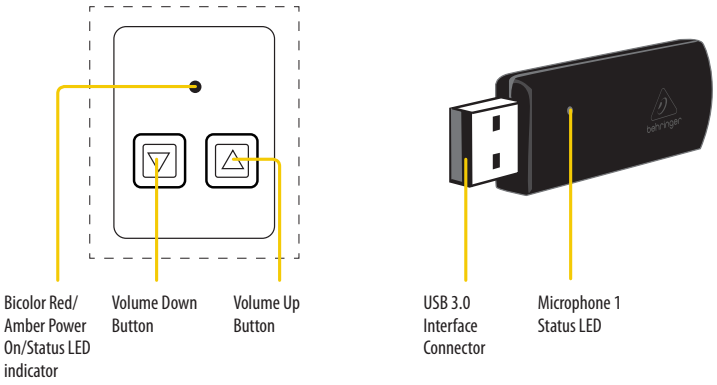

Wireless Mics Connected to "Wireless-Ready" B115MP3 Active Loudspeaker

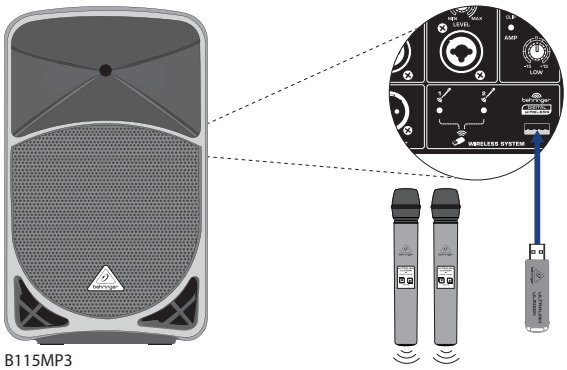

Wireless Mics Connected to "Wireless-Ready" QX2442USB Mixer

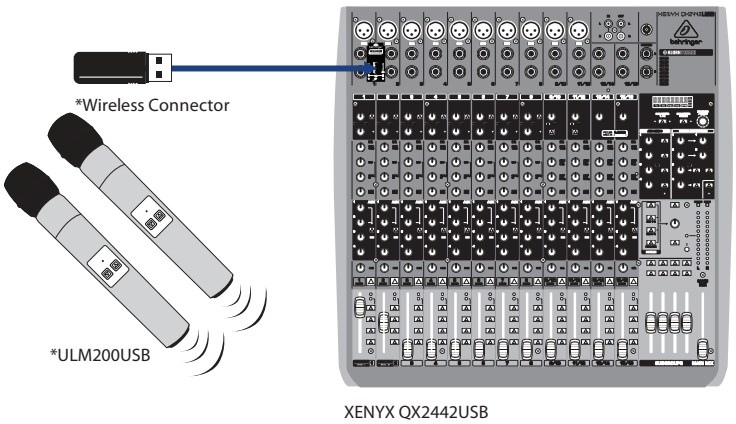

ULTRALINK USB Wireless Microphones ULM200USB ULM100USB

Wireless Mic Connected to Laptop for Direct Recording

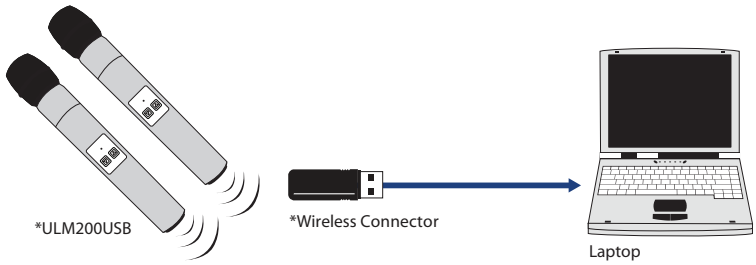

Specifications

RF output	+17 dBm (50 mW)
Working range	120 m maximum (Line of Sight)
Dynamic range	> 67 dB
Frequency response	20 Hz – 15 kHz (Wireless Link)
Sampling rate	31.25 kHz
Audio coding	Pulse-coded modulation (PCM)
RF channel	2.4 GHz ISM band (2417 - 2471 MHz), 19 channels
Latency	9 ms
Power supply current	160 mA @ +2.7 VDC, (microphone) 140 mA @ +3 VDC
Power supply current	100 mA @ +5 VDC (USB receiver)
Dimensions (W x D x H)	1.8 x 1.8 x 9.6" 45 x 45 x 245 mm
Weight	0.4 lbs / 0.2 kg

For service, support or more information contact the BEHRINGER location nearest you:

Europe
MUSIC Group Services UK
Tel: +44 156 273 2290
Email: CARE@music-group.com

USA/Canada
MUSIC Group Services NV Inc.
Tel: +1 702 800 8290
Email: CARE@music-group.com

Japan
MUSIC Group Services JP K.K.
Tel.: +81 3 6231 0454
Email: CARE@music-group.com

This device has not been authorized by the rules of the Federal Communications Commission. This device is not, and may not be, off ered for sale or lease, or sold or leased in the 50 U.S. states, the District of Columbia and U.S. possessions, until authorization is obtained. Technical specifications and appearances are subject to change without notice and accuracy is not guaranteed. BEHRINGER, KLARK TEKNIK, MIDAS, BUGERA, and TURBOSOUND are part of the MUSIC Group (music-group.com). All trademarks are the property of their respective owners. MUSIC Group accepts no liability for any loss which may be suffered by any person who relies either wholly or in part upon any description, photograph or statement contained herein. Colors and specifications may vary from actual product. MUSIC Group products are sold through authorized fullfillers and resellers only. Fullfillers and resellers are not agents of MUSIC Group and have absolutely no authority to bind MUSIC Group by any express or implied undertaking or representation. This manual is copyrighted. No part of this manual may be reproduced or transmitted in any form or by any means, electronic or mechanical, including photocopying and recording of any kind, for any purpose, without the express written permission of MUSIC Group IP Ltd. ALL RIGHTS RESERVED. © 2013 MUSIC Group IP Ltd. Trident Chambers, Wickhams Cay, P.O. Box 146, Road Town, Tortola, British Virgin Islands.

No Exception Taken
MFIA, Inc
Gary Adovnik
Checking is only for general conformance with the design concept of the project and general compliance with the information given in the contract documents. Any action shown is subject to the requirements of the plans and specifications. Contractor is responsible for: Dimensions, which shall be confirmed and correlated at the job site; fabrication processes and techniques of construction; coordination of his work with that of all other trades; and the satisfactory performance of his work.
06/15/2021

DENON PROFESSIONAL

www.denonpro.com PHONE: [401] 658.3131 May 2, 2021

DN-300RMKII Solid-State SD/USB Audio Recorder

Key Features:

- Records WAV and Mp3 files to SD and USB media simultaneously
- Simple and easy to use
- Powers-up in record-ready mode
- Dual Stereo & Dual Mono modes for recording -10dB safety tracks on the same media
- Balanced and unbalanced inputs and outputs
- Compact 1RU design

Overview:

The DN-300RMKII records to both SD and USB media simultaneously – perfect for recording conferences where the client needs a copy of the recording after the event. With outstanding ease-of-use and simple operation, anyone can use the DN-300RMKII right out of the box and record to SD, USB or both. Utilizing Dual Mono or Dual Stereo modes, the ability to record a second mono or stereo file at -10dB on the same media is supported - even when recording to both SD and USB at the same time. The DN-300RMKII is exactly what the market is looking for in terms of a simple but high-quality recording solution for commercial applications. The DN-300RMKII gives installers and contractors the flexibility and convenience they need for total commercial recording capability.

Specifications:

- Digital Audio System
  - System:
    - Solid-state SD/USB audio recorder/player
  - Compatible Media (FAT16, FAT32)
    - USB Device (mass storage class)
    - SD/SDHC
    - SDXC
  - Supported File Formats
    - MP3
      - Sampling frequency:
        - 44.1 kHz
      - Bit rate:
        - 192, 256 kbps (recording); 64 - 320 kbps and VBR (playback)
      - Format:
        - MPEG1 Audio Layer 3
      - File extension:
        - .mp3
    - WAV
      - Sampling frequency:
        - 44.1, 48 kHz
      - Bit depth:
        - 16-bit (44.1 kHz), 24-bit (48 kHz)
      - Format:
        - Waveform Audio File Format
      - File extension:

        - .wav
    - Number of Channels:
        - 2 channels / stereo
    - Audio Frequency Range:
        - 10 - 20 kHz (± 1.0dB recording, ± 0.8 dB playback)
    - Signal-to-Noise Ratio
        - Recording:
            - > 95 dB (1 kHz, 0dB A-weighted)
        - Playback:
            - > 95 dB (1 kHz, 0dB A-weighted)
    - Channel Separation
        - Recording:
            - > 80 dB (1 kHz, 0dB A-weighted)
        - Playback:
            - > 90 dB (1 kHz, 0dB A-weighted)
    - Wow and Flutter:
        - < 0.001 %
    - Distortion
        - Recording:
            - < 0.008 %
        - Playback:
            - < 0.006 %
    - Total Harmonic Distortion:
        - < 0.01% (1 kHz, 0dB A-weighted)
- Inputs
    - Balanced XLR
        - Nominal level:
            - +4 dBu ± 1 dBu
        - Minimum level:
            - - 40 dBu
        - Maximum level:
            - 20 dBu ± 1 dBu
        - Input impedance:
            - 18 kâ„¦
- Outputs
    - Balanced XLR
        - Nominal level:
            - +4dBu ± 1 dBu
        - Maximum output level:
            - +20 dBu ± 1 dBu
        - Output impedance:
            - 600 â„¦ ± 10%
    - Unbalanced RCA
        - Nominal level:
            - -10 dBV ± 2 dBV
        - Minimum output level:
            - 6 dBV ± 2 dBV
- Connectors
    - (2) XLR outputs
    - (1) 1/4" (6.35mm) headphone output
    - (1) RCA stereo output pair
    - (2) XLR inputs
    - (1) RCA stereo input pair

- (1) USB port
- (1) SD card slot
- (1) IEC AC power input

- Power
  - Connection:
    - IEC
  - Input Voltage:
    - 100 - 240 V~, 50/60 Hz
- Dimensions (width x depth x height):
  - 19.0" x 10.92" x 1.72" (484 x 277 x 44mm)
- Weight:
  - 6.6 lbs (3 kg)

FEATURES OF THE H6

- Interchangeable input capsules
- Six-track simultaneous recording
- Four mic/line inputs with XLR/TRS combo connectors
- Gain control knobs and -20dB pads for each input
- Supplied XYH-6 X/Y capsule provides secondary input via a stereo ⅛” Mic/Line In mini phone jack
- Phantom power for all main inputs: +12/+24/+48V
- Large full-color, angled LCD display
- Records directly to SD, SDHC and SDXC cards up to 128GB
- Up to 24-bit /96kHz audio in BWF-compliant WAV or a variety of MP3 formats
- Auto-record, Pre-record and Backup-record functions mean that you'll never miss that perfect take
- Built-in effects, including low-cut filtering, compression, and limiting
- Multichannel and stereo USB audio interface for PC/Mac/iPad
- Accepts standard AA alkaline or NiMH rechargeable batteries
- Over 20 hours of operation with 4 AA alkaline batteries

A CLOSER LOOK AT THE H6

SPECS

RECORDING MEDIA

SD CARD:	16MB to 2GB
SDHC CARD:	4GB to 32GB
SDXC CARD:	64GB to 128GB

No Exception Taken
MFIA, Inc
Gary Adovnik
Checking is only for general conformance with the design concept of the project and general compliance with the information given in the contract documents. Any action shown is subject to the requirements of the plans and specifications. Contractor is responsible for: Dimensions, which shall be confirmed and correlated at the job site; fabrication processes and techniques of construction; coordination of his work with that of all other trades; and the satisfactory performance of his work.
06/15/2021

audio-technica

Search

- Login
- Register

0 0

/ Products

Featured Products

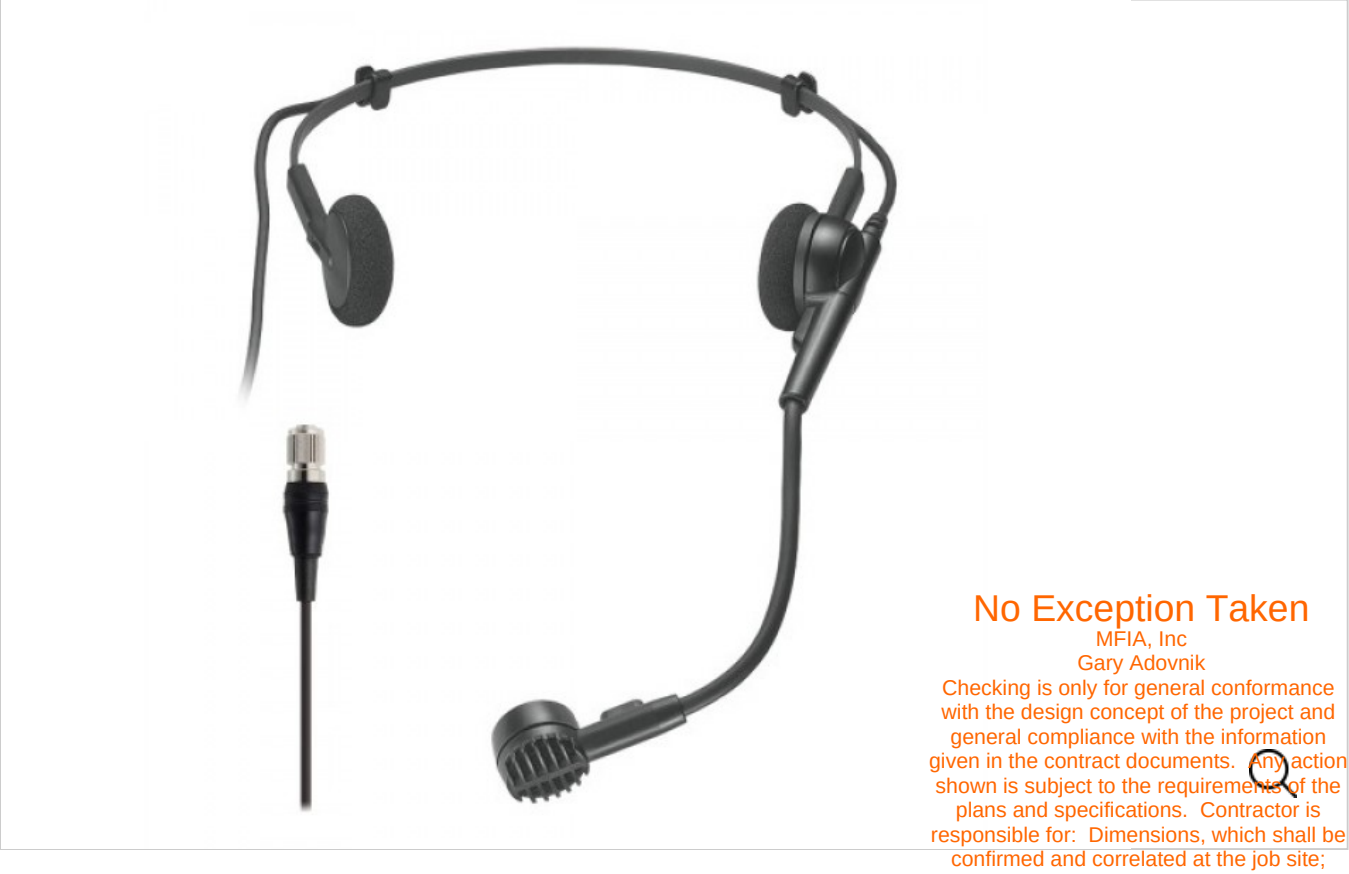

No Exception Taken
MFIA, Inc
Gary Adovnik
Checking is only for general conformance with the design concept of the project and general compliance with the information given in the contract documents. Any action shown is subject to the requirements of the plans and specifications. Contractor is responsible for: Dimensions, which shall be confirmed and correlated at the job site; fabrication processes and techniques of construction; coordination of his work with that of all other trades; and the satisfactory performance of his work.

06/15/2021

/ PRO8HEcH

Hypercardioid Dynamic Headworn Microphone, for A-T Wireless System

audio-technica

Search

Login
Register

This product is temporarily out of stock. You may opt-in our waiting list and we'll notify you once the product is restocked.

Email

SUBMIT

KEY FEATURES

- Ideal for guitarists, keyboard players, drummers and others who need the use of their hands during performance
- Low-visibility headband and cushioned support pads provide a stable, comfortable fit
- Pivot-mounted flexible mic boom descends from left or right side
- Hypercardioid polar pattern improves isolation of desired sound source
- Hi-ENERGY® neodymium element for articulate vocal reproduction
- Rugged 4-pin cH-style screw-down connector provides secure connection to Audio-Technica body-pack wireless transmitter
- Also available as: **PRO8HEx** - 7.2' (2.2 m) cable permanently attached between microphone and XLRM-type connector

SPECIFICATIONS

Element	Dynamic
Polar Pattern	Hypercardioid
Weight	60g
Dimensions	Microphone: 0.80" (20.4 mm) diameter Headset: 4.72" (120.0 mm) nominal at widest point, 3.17" (80.5 mm) flexible boom
Output Connector	Rugged 4-pin cH-style screw-down connector

Lowell™
Distributed Audio, Power & Rack Solutions

Portable Rack: LPR-2122

Portable rack includes front and rear doors with key locks for security.

100% CERTIFIED US STEEL · MADE IN THE U.S.A · c UL us LISTED UL2416 · RoHS COMPLIANT · EIA TIA COMPLIANT

FEATURES:

- **Panel Space:** 21U or 36.875" [937]
- **Height:** 42.875" [1089] rack
  48.01" [1219] rack w/casters
- **Depth:** 22.00" [559] rack
  19.34" [491] usable
- **Width:** 23.06" [586] rack
- **Construction:** Fully welded certified U.S. steel, 16-gauge frame and 14-gauge base reinforced at all load-bearing junctions. Black wrinkle powder epoxy finish. Beveled edge corners.
- **Front:** Reversible (left or right swing) solid steel surface-mount door, with recessed handle and key lock, extends 1" from frame. Vents in frame above and below door.
- **Rear:** Reversible recessed door with upper/lower vents and key lock. Knockouts in frame above and below door feature combination EKOs for conduit (1/2"–3/4" and 1"–1-1/2"). Top panels also include KOs for wireless antennae (1/2").
- **Sides:** Welded sides feature handles and upper and lower vents.
- **Bottom:** Solid bottom. Set of 4 heavy duty swivel casters (2 locking) ship inside rack for field installation. Casters add 5.13" to overall rack height.
- **Top:** Solid steel top with dimples to field-mount optional overhanging laminate top (order separately).
- **Cable Management:** Combination knockouts in rear panels. Generous space for managing wire between front rails and front-to-rear rail supports.
- **Rack Rails (21U fully adjustable):** One pair 11-gauge steel 10-32 threaded rails with black finish and numbered RU increments.
- **Hardware:** Black pilot point screws with captive washers for quick installation.
- **Compliance:** EIA/TIA compliant. RoHS compliant. UL 2416 Listed in U.S.A. and Canada.
- **UL Listed Load Capacity:** 900 lbs. [408 kg]

A&E SPECIFICATIONS:

The EIA/TIA compliant, portable 19" equipment rack shall be Lowell model LPR-2122 with overall dimensions of 42.875"H (without casters) x 22.00"D x 23.06"W; usable height of 21 rack units, and usable depth of 19.34". It shall include one-pair swivel and one-pair swivel/locking casters which shall be field installed and increase overall height 5.13". Rack construction shall be fully welded certified U.S. steel with 16-gauge frame and 14-gauge bottom reinforced at load-bearing junctions, all with black wrinkle powder epoxy finish. Welded sides shall feature handles and vents. The rack shall include a recessed rear door with upper/lower vents and key lock, and a solid steel surface-mount front door with integral handle and key lock. The rear frame shall feature removable knockout panels above and below door with 1/2"–3/4" and 1"-1-1/2" EKOs for conduit—upper panels shall also include 1/2" KOs for wireless antennae. One panel below the door shall be blank. The front frame shall feature vents above and below the door. Rack top and bottom shall be solid steel. The rack shall include one pair of (21U) adjustable 11-gauge steel rails tapped 10-32 on 19" E.I.A. spacing with black finish and numbered rack unit increments. The UL 2416 Listed rack shall be manufactured in the U.S.A. with load capacity of 900 lbs.

OPTIONS: (order separately)

- **RRD-21:** Additional pair of 21U rails.
- **KOP-N:** Pair of panels for specialty connectors (Neutrik D series, Switchcraft HPC or E series) are sized to replace rear knockout panels.
- **KOP-AC1502:** Knockout panel with two 15A outlets and 6' cord (replaces one rear panel).
- **LGT-22:** Premium Graphite Grey laminate top with rubber edge molding overhangs rack (1"H x 24.06"D x 24.69"W).

Lowell strives to provide accurate information while reserving the right to change specifications and/or improve manufacturing methods without prior notification.
©2021 Lowell Manufacturing Co., 100 Integram Dr., Pacific MO 63069 / tel. 800.325.9660 / www.lowellmfg.com

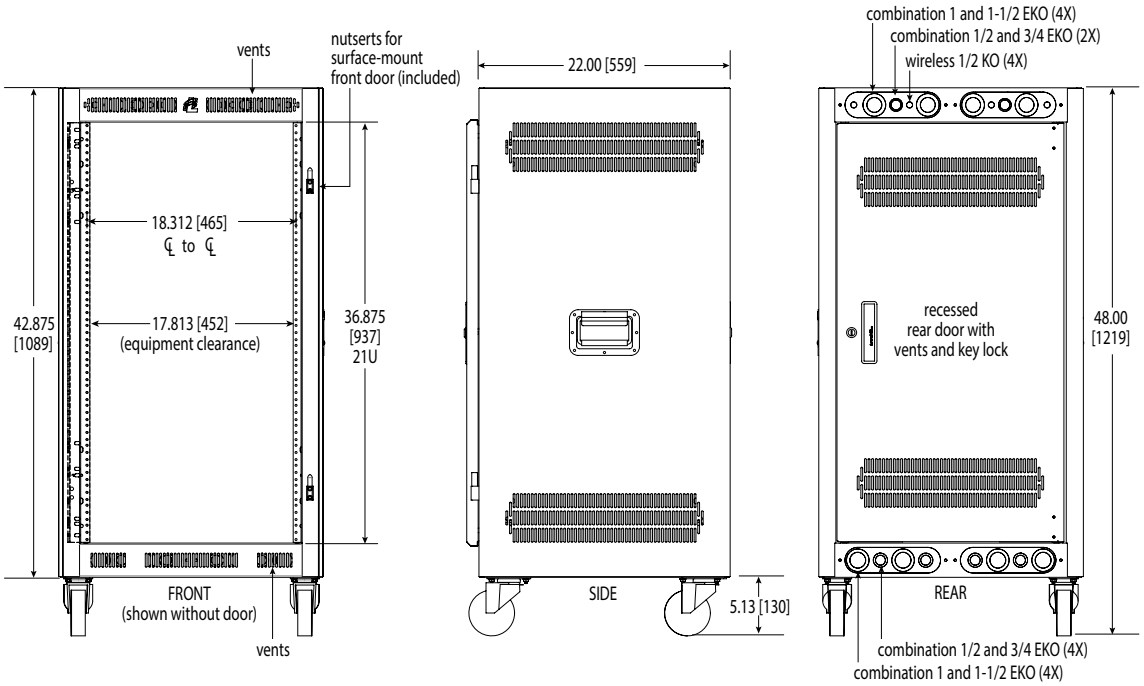

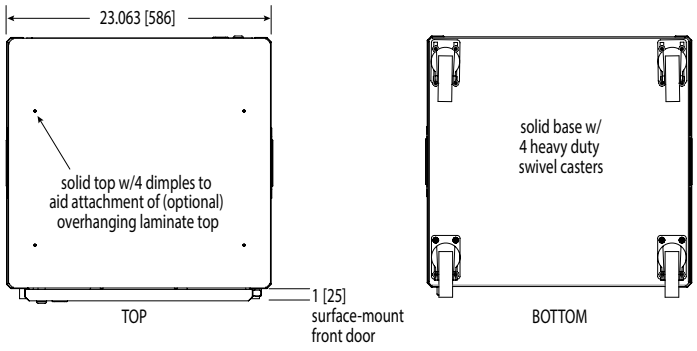

No Exception Taken

MFIA, Inc

Gary Adovnik

Checking is only for general conformance with the design concept of the project and general compliance with the information given in the contract documents. Any action shown is subject to the requirements of the plans and specifications. Contractor is responsible for: Dimensions, which shall be confirmed and correlated at the job site; fabrication processes and techniques of construction; coordination of his work with that of all other trades; and the satisfactory performance of his work.

Summary: LPR Series Portable Racks

06/15/2021

	Model No.	Rack Units	Rack Depth*	Usable Depth	Rack Width*	Height without casters*	Height with casters*	Adj. Rails	Front Door	Rear Door	Rack Top
	LPR-1422	14 U	22.00 [559]	19.34 [491]	23.06 [586]	30.63 [778]	35.75 [908]	1 pr	Solid Steel	Vented	Steel
This spec	**LPR-2122**	**21 U**	**22.00 [559]**	**19.34 [491]**	**23.06 [586]**	**42.88 [1089]**	**48.01 [1219]**	**1 pr**	**Solid Steel**	**Vented**	**Steel**
	LPR-1427	14 U	27.00 [686]	24.34 [618]	23.06 [586]	30.63 [778]	35.75 [908]	1 pr	Solid Steel	Vented	Steel
	LPR-2127	21 U	27.00 [686]	24.34 [618]	23.06 [586]	42.88 [1089]	48.01 [1219]	1 pr	Solid Steel	Vented	Steel
	LPR-2427	24 U	27.00 [686]	24.34 [618]	23.06 [586]	48.13 [1222]	53.25 [1353]	1 pr	Solid Steel	Vented	Steel
	LPR-1422FV	14 U	22.00 [559]	19.34 [491]	23.06 [586]	30.63 [778]	35.75 [908]	1 pr	Fully-vented	Vented	Steel
	LPR-2122FV	21 U	22.00 [559]	19.34 [491]	23.06 [586]	42.88 [1089]	48.01 [1219]	1 pr	Fully-vented	Vented	Steel
	LPR-1427FV	14 U	27.00 [686]	24.34 [618]	23.06 [586]	30.63 [778]	35.75 [908]	1 pr	Fully-vented	Vented	Steel
	LPR-2127FV	21 U	27.00 [686]	24.34 [618]	23.06 [586]	42.88 [1089]	48.01 [1219]	1 pr	Fully-vented	Vented	Steel
	LPR-2427FV	24 U	27.00 [686]	24.34 [618]	23.06 [586]	48.13 [1222]	53.25 [1353]	1 pr	Fully-vented	Vented	Steel
	LPR-1422PGT	14 U	22.00 [559]	19.34 [491]	23.06 [586]	30.63 [778]	35.75 [908]	1 pr	Smk. Plexiglass	Vented	Steel+Laminate**
	LPR-2122PGT	21 U	22.00 [559]	19.34 [491]	23.06 [586]	42.88 [1089]	48.01 [1219]	1 pr	Smk. Plexiglass	Vented	Steel+Laminate**
	LPR-1427PGT	14 U	27.00 [686]	24.34 [618]	23.06 [586]	30.63 [778]	35.75 [908]	1 pr	Smk. Plexiglass	Vented	Steel+Laminate**
	LPR-2127PGT	21 U	27.00 [686]	24.34 [618]	23.06 [586]	42.88 [1089]	48.01 [1219]	1 pr	Smk. Plexiglass	Vented	Steel+Laminate**
	LPR-2427PGT	24 U	27.00 [686]	24.34 [618]	23.06 [586]	48.13 [1222]	53.25 [1353]	1 pr	Smk. Plexiglass	Vented	Steel+Laminate**

Rounded rack dimensions – inches [mm]; 1U = 1.75"

** Dimensions shown do not include the front door or laminate top*

*** Laminate top w/rubber edge molding overhangs rack*

Lowell strives to provide accurate information while reserving the right to change specifications and/or improve manufacturing methods without prior notification.
©2021 Lowell Manufacturing Co., 100 Integram Dr., Pacific MO 63069 / tel. 800.325.9660 / www.lowellmfg.com

E2-HDSEM-M Technical Specifications 0.5 to 3.0 meters

Commercial Grade High Retention HDMI Cable Assembly

Rev. 140915

Liberty's E2-HDSEM-M High Speed HDMI® with Ethernet cable assemblies are designed with consideration to the custom installation market. A high quality, heavily shielded digital transport cable mated with approved patented high retention HDMI connector's delivers excellent performance. The cable is third party ATC verified to the highest HDMI cable standard, High Speed HDMI® with Ethernet.

Key Features:

- High speed HDMI with Ethernet
- Low profile 26mm head depth
- High retention HDMI plugs
- UL/CSA listed for in-wall use
- Convenient cable lengths

The E2 series is robustly constructed with 28 AWG tinned annealed copper conductors on the TMDS pairs. The overall cable is dual shielded with a full coverage foil shield and an 85% coverage braided shield. Unlike many cables on the market, the connectors feature full shielding over the solder joints instead of drain wire under a pre-mold. These cables are fully shielded from connector shroud to connector shroud. All contact surfaces are gold plated for conductivity, durability, and resistance to tarnish. The high retention connectors increase the standard HDMI holding force by a factor of 3, up to 12 lbs.

Lengths from 0.5 to 3.0 meters are passive cables. There are No equalization chipsets and directional requirements on These lengths. These general purpose HDMI cables feature UL ratings on the bulk cable for CL2 and Canadian FT4, this Is permissible for concealed installations per the requirements of the National Electric Code®. The product is Compliant to the requirements of the EU RoHS-2 2011/65/EU standard.

Key Applications:

- Commercial Audio/Video
- Residential Audio/Video
- Concealed (in-wall) installs
- Fixed installations

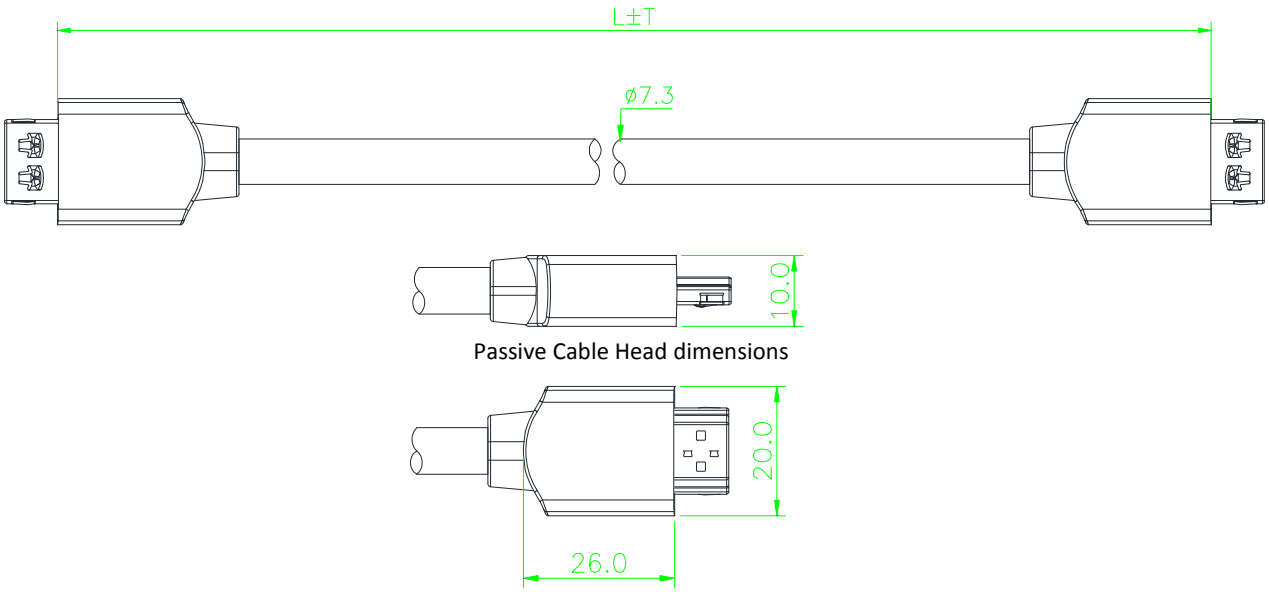

Passive Cable Head dimensions

Technical Specifications	
I/O Connections	
HDMI	Male HDMI Type A connector
HDMI Supported Video, Audio and Ethernet	
HDMI Maximum Video Compatibility	4Kx2K @ 60Hz up to 2m, 4Kx2K @ 30Hz to 3m
Video Compliance	HDMI, HDCP, and CEC (Consumer Electronics Control)
Embedded Audio	Up to PCM 8 channel, Dolby Digital TrueHD, and DTS-HD Master Audio
Maximum Bandwidth	18.0 Gbps (1-2 meters), 10.2Gbps @ 3 meters
Ethernet	100 Mbps
Cable Construction	
HDMI Connector Features	HDMI "A" Male with up to 12 lbs high retention feature, gold plated
HDMI Molded Hood Construction	Copper Foil Shielded Pre-mold with PVC over mold. Over mold is blue in color.
HDMI Molded Hood Dimensions	20.0x26x10.0mm
Jacket Material	Flame rated PVC with a glossy black finish
Cable Construction	28 AWG Tinned Copper TMDS pairs
Overall Cable Size	0.287" | 7.3mm
Minimum Bend Radius	2.87" | 73mm
Maximum Tensile Load	44Lbs | 20Kg
Available Cable Lengths	0.5, 1.0, 2.0, and 3.0 meters
Environmental Requirements	
Operating Temperature	0° to +60° C (+32° to +140° F)
Operating Humidity	20% to 85%, Non-condensing
Storage Temperature	-20° to +80° C (0° to +176° F)
Power and Regulatory	
Regulatory	NEC CL2, CEC FT4, EU RoHS-2 2011/65/EU Compliant

Liberty Wire & Cable specifications are subject to change without notice. Contact an account representative for current product specifications. Liberty Wire & Cable continuously strives to ensure product specifications are accurate and complete. All physical specifications are nominal.

National Electric Code® is a registered trademark of the National Fire Protection Agency (NFPA)
NEC® is a registered trademark of the National Fire Protection Agency (NFPA)
HDMI® is a registered trademark of HDMI, LLC
High Definition Multimedia Interface® is a registered trademark of HDMI, LLC

RAPCOHORIZON
(/)

Looking for something specific?

SEARCH

Search by SKU, Title or Keyword

View Larger Image

NM1 MIC CABLES

RapcoHorizon NM1 Series Microphone Cables

MSRP: $36.93

Item #: NM1-20

Ships in 3 to 5 bus days

Options: 20 FOOT

BUY FROM DEALER

Manufacturer: RHC

Product Details | **Product Specs**

Cable:	MIC1
Conductor Gauge:	(2)24 gauge
Shield:	Bare annealed copper serve
Shield Coverage:	95%
Jacket:	Matte PVC
O.D.	0.230"
Capacitance:	21 pF/ft. @ 1 kHz
Cond.-Shield Capacitance:	37 pF/ft. @ 1 kHz
Characteristic Impedance:	70Ω NOMINAL
D.C. Resistance @ 20°C:	23Ω/1000'

RAPCOHORIZON

- Act (https://www.actlighting.com)

3581 Larch Lane
Jackson, MO 63755

Phone: 800-253-7360
Fax: 269-388-9681

Office Hours: 8:00 AM to 5:30 PM
Mon – Fri (CST)

The "Original" ROADHOG and SILVERHOG products are exclusive to Rapco International, Inc., and are not associated with PIG HOG products offered by Ace Products Enterprises, Inc.

About RapcoHorizon (/Topic/About)

Home (/)
About Us (/topic/about)
Custom Solutions (/topic/custom-solution)
News (/topic/news)

DTP T HWP 4K 231 D

DTP TRANSMITTER FOR HDMI – DECORATOR-STYLE WALLPLATE

DTP SYSTEMS 4K UHD

- Transmits HDMI plus control and analog audio up to 230 feet (70 meters) over a shielded CATx cable
- Supports computer and video resolutions up to 4K, including 1080p/60 Deep Color
- Extron XTP DTP 24 shielded twisted pair cable is strongly recommended for optimal performance
- DTP™ output is compatible with HDBaseT-enabled devices
- Accepts additional analog stereo audio signals
- Bidirectional RS-232 and IR pass-through for AV device control
- Remote power capability
- Supported HDMI specification features include data rates up to 10.2 Gbps, Deep Color up to 12-bit, 3D, HD lossless audio formats, and CEC pass-through
- Supports EDID and HDCP transmission
- Compatible with all DTP 230 Series receivers and DTP-enabled products
- Mounts in an included single-gang decorator-style wallplate
- Highly reliable, energy-efficient external universal power supply included

The Extron DTP T HWP 4K 231 D is a single-gang decorator-style transmitter for sending HDMI, analog audio, and bidirectional control signals up to 230 feet (70 meters) over a shielded CATx cable to Extron DTP™-enabled products. It is designed for efficient use within configurable rooms and environments offering limited space. The HDCP-compliant transmitter features a convenient one-gang form factor that offers maximum placement flexibility.

Extron Electronics
INTERFACING, SWITCHING AND CONTROL

DESCRIPTION

The Extron **DTP T HWP 4K 231 D** is a single-gang, decorator-style transmitter for sending HDMI, audio, and bidirectional RS-232 and IR signals up to 230 feet (70 meters) over a shielded CATx cable to Extron DTP-enabled products. The one-gang form factor provides maximum space efficiency in wall mount, floor box, and furniture mount applications. The DTP T HWP 4K 231 D accepts analog stereo audio signals for simultaneous transmission over the same shielded twisted pair cable. It supports video signals at resolutions up to 4K, including 1080p/60 Deep Color. The transmitter features remote power capability, bidirectional RS-232 and IR pass-through for remote AV device control, and an HDBaseT output mode for compatibility with any HDBaseT-enabled display. The single-gang wall-mountable design of the DTP T HWP 4K 231 D provides the convenience of placing input connections precisely where they are needed.

The DTP T HWP 4K 231 D enables the reliable transmission of HDMI signals, supporting Deep Color up to 12-bit, CEC pass-through, and embedded HD lossless audio formats. DDC communication of EDID and HDCP is continuously maintained between a source and display, ensuring direct compatibility and optimal signal transmission between devices. For added installation flexibility, the transmitter can be remotely powered over the shielded twisted pair cable by a DTP-enabled product. The DTP T HWP 4K 231 D can be integrated with an Extron DTP CrossPoint® 84 Presentation Matrix Switcher, or other DTP-enabled products to support sources at remote locations.

APPLICATION DIAGRAM

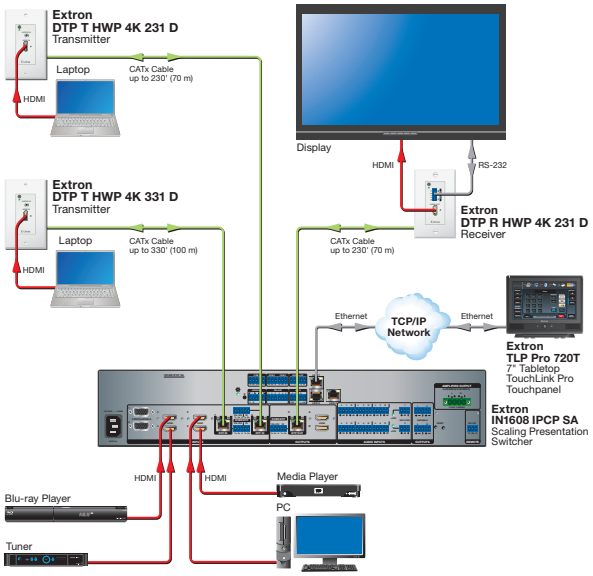

SPECIFICATIONS

TRUE 4K SPECIFICATION

Max 4K Capabilities		
Resolution and Refresh Rate	**Chroma Sampling**	**Max Bit Depth per Color**
4096 x 2160 at 30 Hz 3840 x 2160 at 30 Hz	4:4:4	8 bit
4096 x 2160 at 60 Hz 3840 x 2160 at 60 Hz	4:2:0	

Frame rate[1]	24, 25, 30, 50, or 60 fps
Chroma sampling[1]	4:4:4, 4:2:2, or 4:2:0
Color bit depth[1]	8 bits per color
Signal type	HDMI 1.4, HDCP 2.3
Max. video data rate	10.2 Gbps (3.4 Gbps per color)

NOTE: [1]Subject to the maximum data rate limit. Use our calculator at www.extron.com/4Kdatarate to determine video parameters supported by this data rate.

INTERCONNECTION BETWEEN TRANSMITTER AND RECEIVER

Connectors	1 female RJ-45 per unit for 1 cable connecting the transmitter and receiver
DTP signal	
Signal transmission distance	
1080p @ 60 Hz	Up to 230' (70 m) using shielded twisted pair (STP) cable or XTP DTP 24 cable
2560x1600 @ 60 Hz	Up to 130' (40 m) using STP cable or XTP DTP 24 cable
4K/UHD @ 30 and 60 Hz	Up to 130' (40 m) using STP cable or XTP DTP 24 cable
Cable requirements	Solid conductor, 24 AWG or better
Cable recommendations	400 MHz bandwidth STP cable

NOTE: Extron XTP DTP 24 shielded twisted pair cable is strongly recommended for optimal performance.

Output mode signaling:

DTP: HDMI with embedded audio, analog audio, RS-232 and IR, and remote power

HDBaseT: HDMI with embedded audio plus RS-232 and IR

AUDIO INPUT

Number/signal type	1 stereo (2 channel), unbalanced

NOTE: Analog audio is not embedded onto the digital video signal. Analog audio and digital embedded audio are transmitted simultaneously and output on the receiver on two different connectors.

Connectors	(1) 3.5 mm stereo jack, 2 channel; tip (L); ring (R); sleeve (ground)

GENERAL

Power supply	External Input: 100-240 VAC, 50-60 Hz Output: 12 VDC, 1 A, 12 watts
Enclosure dimensions	
Device	2.8" H x 1.7" W x 1.9" D (7.1 cm H x 4.3 cm W x 4.8 cm D)
Regulatory compliance	
Safety	c-UL, UL
EMI/EMC	AN/NZS, CE**, C-tick, FCC Class A**, ICES

NOTE: Shipping dimensions and weights are available at www.extron.com.

Model	Version Description	Part number
DTP T HWP 4K 231 D	HDMI Decorator-Style Tx, Black - 230 feet (70 m)	60-1421-12
DTP T HWP 4K 231 D	HDMI Decorator-Style Tx, White - 230 feet (70 m)	60-1421-13

For complete specifications, please go to www.extron.com
Specifications are subject to change without notice.

WORLDWIDE SALES OFFICES

Anaheim • Raleigh • Silicon Valley • Dallas • New York • Washington, DC • Toronto • Mexico City • Paris
London • Frankfurt • Madrid • Stockholm • Amersfoort • Moscow • Dubai • Johannesburg • Tel Aviv • Sydney
Melbourne • Bangalore • Mumbai • New Delhi • Singapore • Seoul • Shanghai • Beijing • Hong Kong • Tokyo

www.extron.com

© 2020 Extron Electronics. All rights reserved. All trademarks mentioned are the property of their respective owners. Prices and specifications subject to change without notice.

04-2020
68-2675-01
REV. A3
Letter - English - NP

DTP R HWP 4K 231 D

DTP RECEIVER FOR HDMI – DECORATOR-STYLE WALLPLATE

DTP SYSTEMS 4K UHD

- **Receives HDMI plus control and analog audio up to 230 feet (70 meters) over a shielded CATx cable**
- **Supports computer and video resolutions up to 4K**
- **HDCP 2.3 compliant**
- **Supported HDMI specification features include data rates up to 10.2 Gbps, Deep Color up to 12-bit, 3D, HD lossless audio formats, and CEC pass-through**
- **Extron XTP DTP 24 shielded twisted pair cable is strongly recommended for optimal performance**
- **Supports EDID and HDCP transmission**
- **Bidirectional RS-232 and IR pass-through for AV device control**
- **Remote power capability**
- **Compatible with all DTP® 230 Series transmitters and DTP-enabled products**
- **Highly reliable, energy-efficient external universal power supply included with Tx models**

The Extron DTP R HWP 4K 231 D is a single-gang decorator-style receiver that works with Extron DTP®-enabled products to send HDMI, analog audio, and bidirectional control signals up to 230 feet (70 meters) over a shielded CATx cable. It is designed for efficient use at display locations in environments offering limited space. The HDCP-compliant receiver features a convenient one-gang form factor that offers maximum placement flexibility.

No Exception Taken
MFIA, Inc
Gary Adovnik
Checking is only for general conformance with the design concept of the project and general compliance with the information given in the contract documents. Any action shown is subject to the requirements of the plans and specifications. Contractor is responsible for: Dimensions, which shall be confirmed and correlated at the job site; fabrication processes and techniques of construction; coordination of his work with that of all other trades; and the satisfactory performance of his work.

06/15/2021

Extron Electronics
INTERFACING, SWITCHING AND CONTROL

DESCRIPTION

The Extron **DTP R HWP 4K 231 D** is a single-gang decorator-style receiver that works with Extron DTP-enabled products to send HDMI, audio, and bidirectional RS-232 and IR signals up to 230 feet (70 meters) over a shielded CATx cable. The one-gang form factor provides maximum space efficiency in wall mount, floor box, and furniture mount applications. The DTP R HWP 4K 231 D supports video signals at resolutions up to 4K. It also accepts analog stereo audio signals from a DTP-enabled product over the same shielded twisted pair cable. The wall-mountable design and remote power capability of the DTP R HWP 4K 231 D provide the convenience of placing output connections precisely where they are needed.

The DTP R HWP 4K 231 D enables the reliable transmission of HDMI signals, supporting Deep Color up to 12-bit, CEC pass-through, and embedded HD lossless audio formats. DDC communication of EDID and HDCP is continuously maintained between a source and display, ensuring direct compatibility and optimal signal transmission between devices. For added installation flexibility, the receiver can be remotely powered over the shielded twisted pair cable by a DTP-enabled product. The DTP R HWP 4K 231 D can be integrated with an Extron DTP CrossPoint® Presentation Matrix Switcher, or other DTP-enabled products to support sources at remote locations.

APPLICATION DIAGRAM

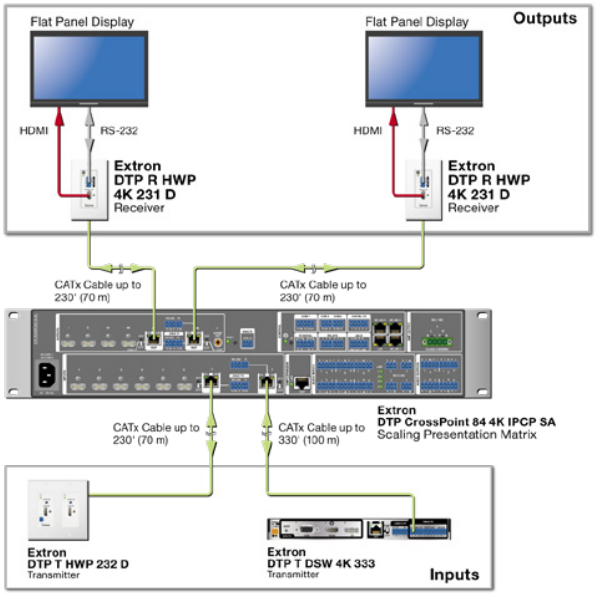

SPECIFICATIONS

TRUE 4K SPECIFICATION

Max. 4K Capabilities		
Resolution and Refresh Rate	**Chroma Sampling**	**Max Bit Depth per Color**
4096 x 2160 at 30 Hz 3840 x 2160 at 30 Hz	4:4:4	8 bit
4096 x 2160 at 60 Hz 3840 x 2160 at 60 Hz	4:2:0	8 bit

Frame rate[1]	24, 25, 30, 50, or 60 fps
Chroma sampling[1]	4:4:4, 4:2:2, or 4:2:0
Color bit depth[1]	8 bits per color
Signal type	HDMI 1.4, HDCP 2.3
Max. video data rate	10.2 Gbps (3.4 Gbps per color)

NOTE: [1]Subject to the maximum data rate limit. Use our calculator at www.extron.com/4Kdatarate to determine video parameters supported by this data rate.

VIDEO

HDMI output	
Maximum pixel clock	300 MHz
Resolution range	Up to 2560x1600* @ 60 Hz or 4K (4096x2160) @ 30 Hz, UHD (3840x2160) @ 30 Hz, 4K/UHD @ 60 Hz with 4:2:0 chroma subsampling (*Reduced blanking)

VIDEO OUTPUT

Connectors	1 female HDMI, type A

INTERCONNECTION BETWEEN TRANSMITTER AND RECEIVER

Signal type	1 DTP 230 input
Connectors	1 female RJ-45 jack
DTP signal	
Signal transmission distance	
1080p @ 60 Hz	Up to 230' (70 m) using shielded twisted pair (STP) cable or XTP DTP 24 cable
2560x1600 @ 60 Hz	Up to 130' (40 m) using STP cable or XTP DTP 24 cable
4K/UHD @ 30 and 60 Hz	Up to 130' (40 m) using STP cable or XTP DTP 24 cable
Cable requirements	Solid conductor, 24 AWG or better
Cable recommendations	400 MHz bandwidth STP cable

NOTE: Extron XTP DTP 24 shielded twisted pair cable is strongly recommended for optimal performance.

AUDIO OUTPUT

Number/signal type	1 stereo, balanced/unbalanced

GENERAL

Power supply	External (not included) Input: 100-240 VAC, 50-60 Hz Output: 12 VDC, 1.5 A, 18 watts
Enclosure dimensions	
Device	4.2" H x 1.7" W x 2.2" D (10.7 cm H x 4.3 cm W x 5.8 cm D)
Regulatory compliance	c-UL, C-tick, CE**, FCC Class A**, ICES, UL, VCCI Complies with the appropriate requirements of RoHS, WEEE

NOTE: **CE and FCC testing is conducted with STP cable.

NOTE: Shipping dimensions and weights are available at www.extron.com.

Model	Version Description	Part number
DTP R HWP 4K 231 D	HDMI Decorator-Style Rx, Black - 230 feet (70 m)	60-1531-12
DTP R HWP 4K 231 D	HDMI Decorator-Style Rx, White - 230 feet (70 m)	60-1531-13

For complete specifications, please go to www.extron.com
Specifications are subject to change without notice.

© 2020 Extron Electronics. All rights reserved. All trademarks mentioned are the property of their respective owners. Prices and specifications subject to change without notice.

04-2020
68-2932-01
REV. A4
Letter - English - NP

ACCESSORIES

Models D-XLR2F, DB-XLR2F, DS-XLR2F
Dual XLR 3-pin Female Jacks on Decora® Wall Plate

DB-XLR2F

DS-XLR2F

D-XLR2F

No Exception Taken
MFIA, Inc
Gary Adovnik
Checking is only for general conformance with the design concept of the project and general compliance with the information given in the contract documents. Any action shown is subject to the requirements of the plans and specifications. Contractor is responsible for: Dimensions, which shall be confirmed and correlated at the job site; fabrication processes and techniques of construction; coordination of his work with that of all other trades; and the satisfactory performance of his work.

06/15/2021

Radio Design Labs Technical Support Centers
U.S.A. (800) 933-1780, (928) 778-3554; Fax: (928) 778-3506
Europe [NH Amsterdam] (++31) 20-6238 983; Fax: (++31) 20-6225-287

RDL • 659 N. 6th St. • Prescott, AZ., USA 86301 • (928) 443-9391 • FAX (928) 443-9392 • www.rdlnet.com

ACCESSORIES

Models **D-CIJ3, DB-CIJ3, DS-CIJ3**
Consumer Input Jacks – Mono

Models **D-CIJ3D, DB-CIJ3D, DS-CIJ3D**
Consumer Input Jacks – Stereo

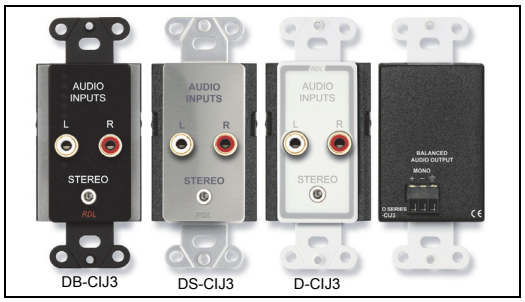

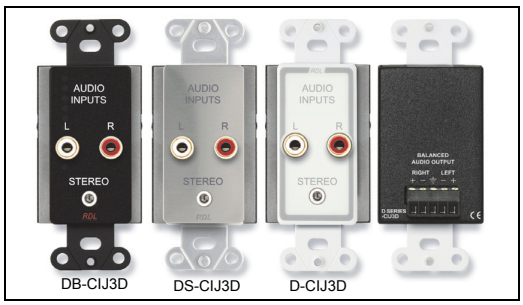

- Stereo Inputs to Stereo Outputs (D SERIES-CIJ3D)
- Stereo Inputs to Mono Output (D SERIES-CIJ3)
- Stereo Inputs on RCA Jacks and Stereo Mini-Jack
- Unbalanced to Balanced Conversion Without Gain
- Transformer Isolation for Unbalanced Line Inputs
- Hum Cancellation on Unbalanced Line Inputs
- Line-Level Output to Feed 10 kΩ Equipment Inputs
- Output Connections on Detachable Terminal Block
- Mix Stereo Inputs to Mono Balanced (D SERIES-CIJ3)
- Available in Stainless Steel, Black and White

The D-CIJ3 and D-CIJ3D are Decora®-compatible audio input accessories from Radio Design Labs. All metal enclosures are attractively finished in white, black or brushed stainless steel to complement the decor encountered in commercial environments. Custom labeling is available at www.rdlnet.com.

D SERIES-CIJ3: The -CIJ3 is the ideal choice in installations requiring the passive mixing of two unbalanced line-level audio sources to feed a mono balanced (or unbalanced) audio line.

The -CIJ3 is a complete unbalanced line-level audio input module. The front panel features two gold plated phono jacks and a single stereo mini-jack, intended for mono or stereo consumer level sources. An input signal may be connected to either the phono jacks or to the mini-jack. The left and right signal inputs are combined and balanced through audio transformers configured to reject induced hum. A mono line-level output is provided on the rear-panel detachable terminal block for connection to a 10 kΩ or higher input impedance line-level module or equipment input.

D SERIES-CIJ3D: The -CIJ3D is the ideal choice in installations requiring stereo unbalanced line-level audio sources to feed stereo balanced (or unbalanced) audio lines.

The -CIJ3D is a complete unbalanced line-level audio input module. The front panel features two gold plated phono jacks and a single stereo mini-jack, intended for mono or stereo consumer level sources. An input signal may be connected to either the phono jacks or to the mini-jack. The inputs are balanced through audio transformers configured to reject induced hum. A stereo line-level output is provided on the rear-panel detachable terminal block for connection to 10 kΩ or higher input impedance line-level module or equipment inputs.

Wherever consumer format audio signals need to be connected to a professional audio system, the -CIJ3 and -CIJ3D are the ideal choices. Use them individually or in conjunction with other RDL products as part of a complete audio/video system.

ACCESSORIES

Installation/Operation

Models **D-CIJ3, DB-CIJ3, DS-CIJ3**
Consumer Input Jacks – Mono

Models **D-CIJ3D, DB-CIJ3D, DS-CIJ3D**
Consumer Input Jacks – Stereo

CE **Declaration of Conformity available from rdlnet.com.**
Sole EMC specifications provided on product package.
Specifications are subject to change without notice.

AUDIO INPUT CONNECTIONS

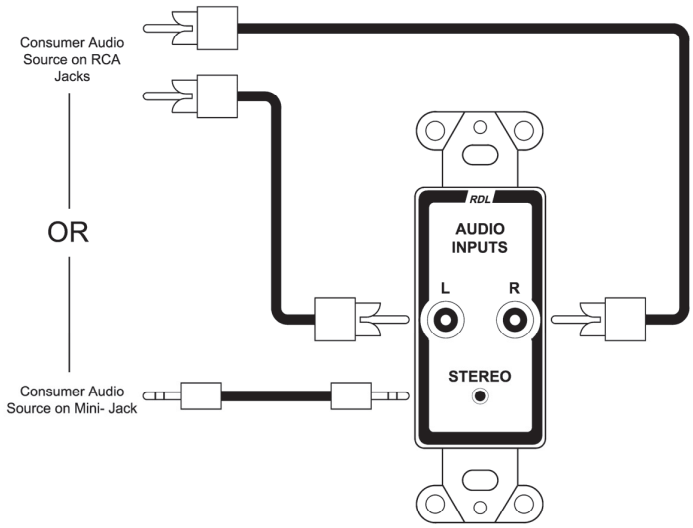

AUDIO OUTPUT CONNECTIONS

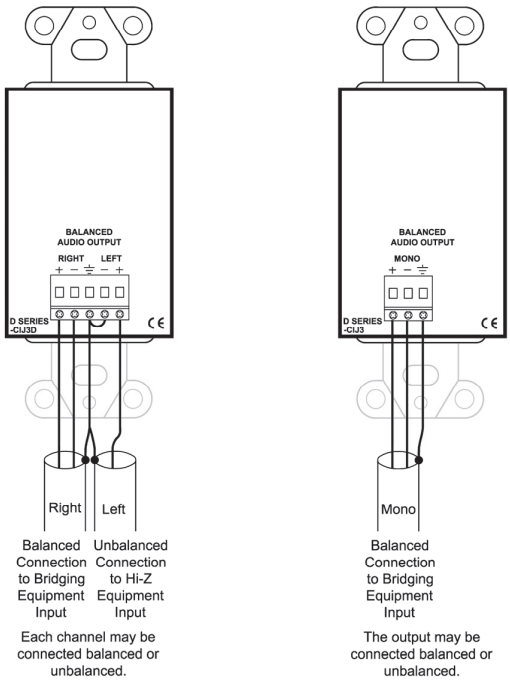

TYPICAL PERFORMANCE

Input connectors (3):	Phono jacks with gold contacts (Left and Right), Mini-jack 3.5 mm (Stereo)		
Frequency response (line level):	50 Hz to 20 kHz (±1 dB); 30 Hz to 20 kHz (±2 dB)		
Crosstalk (D SERIES-CIJ3D):	<-80 dB (1 kHz); <-60 dB (10 Hz to 20 kHz)		
THD:	<0.2% (1 kHz)		
Output connector:	Detachable terminal block		
Dimensions:	Height:	4.13 in.	10.49 cm
	Width:	1.7 in.	4.32 cm
	Depth:	2.15 in.	5.47 cm
Mounting Box Minimum Dimensions:	Width:	1.80 in.	4.57 cm
	Depth:	1.75 in.	4.45 cm

No Exception Taken
[illegible] Inc
Gary Adovnik
Checking is only for general conformance with the design concept of the project and general compliance with the information given in the contract documents. Any action shown is subject to the requirements of the plans and specifications. Contractor is responsible for: Dimensions, which shall be confirmed and correlated at the job site; fabrication processes and techniques of construction; coordination of his work with that of all other trades; and the satisfactory performance of his work.

06/15/2021

Radio Design Labs Technical Support Centers
U.S.A. (800) 933-1780, (928) 778-3554; Fax: (928) 778-3506
Europe [NH Amsterdam] (++31) 20-6238 983; Fax: (++31) 20-6225-287

891-5357B

Attero Tech by QSC
Axiom BT1

Bi-directional Bluetooth audio wall plate

Applications: Meeting Spaces • Restaurants • Retail • K-12

Features

- Provides simple, bi-directional Bluetooth connectivity (2 x 0, 1 x 1, or 1 x 0)
- Simple, one-button pairing/connect process with LED connection status indicator
- Provides a wireless call bridging solution for conferencing systems with dedicated microphones and speakers
- 3.5 mm TRRS stereo analog audio jack allows for connecting to smart devices and media players
- Defeatable pairing button for restricted use applications with third-party control systems
- Single-gang, Decora form factor
- RS-232 control over volume and mute
- Ships with both black and white Decora plates and fascia inserts

Attero Tech by QSC Axiom Series products provide simple, flexible and cost-effective solutions for point-to-point analog audio extension over non-networked CAT-5 technology. The Axiom Series combines a single-gang USB, Bluetooth or XLR wallplate with an audio expander to offer easy integration of portable audio devices into an installed AV system, mixer or other audio destination.

Axiom BT1 features two-way Bluetooth connectivity and a 3.5 mm stereo audio connector, allowing users to easily connect consumer-grade devices to the room's audio system for music playback or Bluetooth conference call bridging.

System Connectivity Diagram

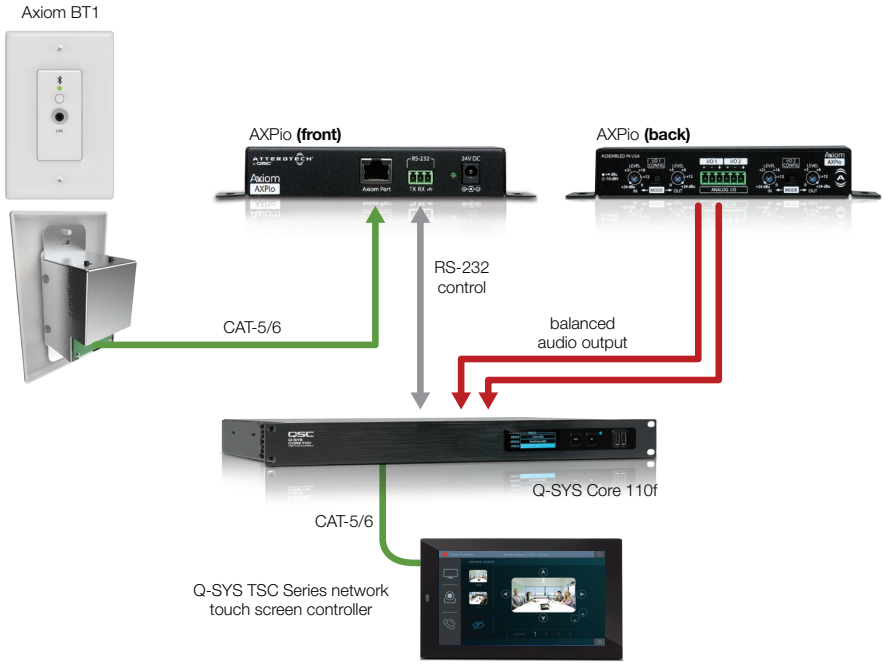

Axiom BT1 Details

Audio	
Bluetooth audio channels	1 x 1 (Call Bridging mode) 2 x 0 (Stereo Music Playback mode) 1 x 0 (Mono-mixed Stereo Music mode)
Multifunction status LED	White = Idle State Flashing Blue = Discoverable by Bluetooth devices Solid Blue = Paired/Connected to a Bluetooth Device Red = Initializing Green = Device Plugged into 3.5 mm port
Frequency response	20 Hz - 20 kHz, +/-1 dB
3.5mm TRRS aux IO	10 kΩ input impedance 200 Ω output impedance
USB	Type mini-B (for setup only)

Power	
Operating temperature	0 to 40° C
Power requirements	+24 VDC @ 50 mA
Power consumption	1.2 W

General	
Dimensions (HWD):	4.2 x 1.7 x 1.8 in (107 x 42 x 47 mm)
Weight	0.35 lb (0.16 kg)
Certifications	FCC Part 15, Subpart B EN 55032:2015 EN 55035:2017 Class B RoHS WEEE

Dimensions

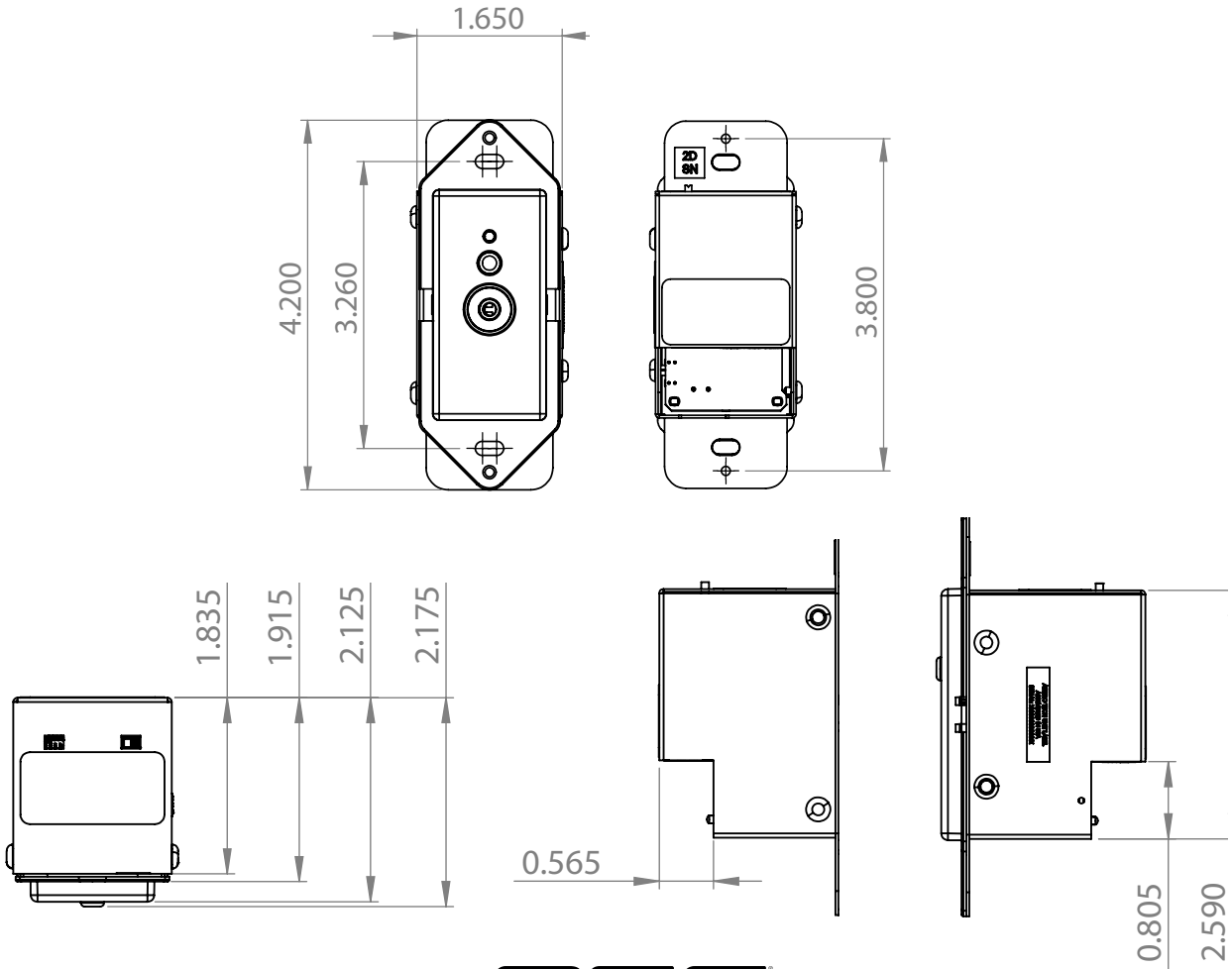

1675 MacArthur Boulevard • Costa Mesa, CA 92626 • Ph: 800/854-4079 or 714/957-7100 • Fax: 714/754-6174
© 2020 QSC, LLC all rights reserved. QSC and the QSC logo are registered trademarks of QSC, LLC in the U.S. Patent and Trademark office and other countries. All other trademarks are the property of their respective owners. Patents may apply or be pending.

Axiom BT1 Spec Sheet 10/8/2020

Contact
Copper LAN Product Inquiry
Phone: 717-354-6200
berktek.support@nexans.com

LANmark-1000 Enhanced Category 6 Plenum Rated

LANmark-1000 Plenum
Part Number: 10032094

LANmark-1000 has been improved to offer best-in-class electrical performance. Berk-Tek's engineers completely redesigned LANmark-1000 so that all crosstalk parameters could be improved by four dB. As a result, the Power Sum Attenuation to Crosstalk ratio (PSACR) is nearly 3 times better (at 250 MHz) allowing for much greater signal strength and less vulnerability to noise interference. At Berk-Tek, we understand that your business runs through us.

Description

Berk-Tek LANmark-1000, Performance Guaranteed

Before any cable can display the **Berk-Tek LANmark-1000** legend, it must pass factory tests with ***a minimum of 5dB of crosstalk margin beyond the CAT 6 standard for NEXT, PSNEXT, ACR and PSACR.*** If the margin is missing, so is the legend. That is our guarantee to you.

Your business demands continuous performance from your IT network, so our specifications aren't simply numbers on the page. They define the way that we do business. This means that you are ***guaranteed*** industry-leading performance and quality for all Berk-Tek products.

Some other manufacturers talk about "typical" values, at Berk-Tek, we hold ourselves to a higher standard. We won't talk about typicals, we talk about what is true, guaranteed, and independently verified.

Keep your business running by relying on Berk-Tek.

Berk-Tek ...*Because Your Business Runs Through Us.*

Construction

23 AWG bare copper wire insulated with FEP. Two insulated conductors twisted together to form a pair and four such pairs laid up with crossfiller to form the basic unit, jacketed with flame-retardant PVC.

Flame Rating

Plenum - NFPA 262, CMP, UL Listed

Features

- Full Power Sum Performance
- Documented balance characteristics (LCL, LCTL)
- ETL verified to ANSI/TIA/EIA-568-C.2
- RoHS Compliant

Benefits

- Optimal support for Gigabit Ethernet with headroom
- Power sum characterization gives highest performance using existing applications
- Provides additional bandwidth required for future applications
- Addition of balance requirements improves overall cable performance and reduces cable emissions which results in reduced transmission errors
- Characterized to 550 MHz, 300 MHz greater than the standard

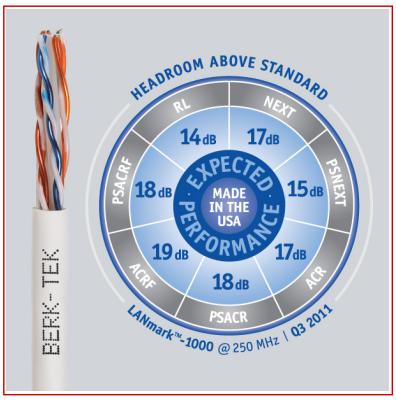

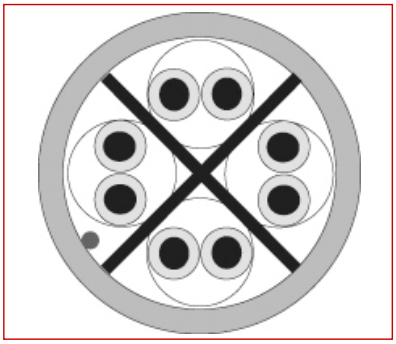

Standards

International ISO/IEC 11801

National ANSI/TIA-568-c.2 Category 6; UL 444

No Exception Taken
MFIA, Inc
Gary Adovnik
Checking is only for general conformance with the design concept of the project and general compliance with the information given in the contract documents. Any action shown is subject to the requirements of the plans and specifications. Contractor is responsible for: Dimensions, which shall be confirmed and correlated at the job site; fabrication processes and techniques of construction; coordination of his work with that of all other trades; and the satisfactory performance of his work.

06/15/2021

All drawings, designs, specifications, plans and particulars of weights, size and dimensions contained in the technical or commercial documentation of Nexans is indicative only and shall not be binding on Nexans or be treated as constituting a representation on the part of Nexans.

Contact
Copper LAN Product Inquiry
Phone: 717-354-6200
berktek.support@nexans.com

LANmark-1000 Enhanced Category 6 Plenum Rated

LANmark-1000 Plenum
Part Number: 10032094

Characteristics

Construction characteristics	
Type of cable	UTP
Colour	Blue
Dimensional characteristics	
Length per reel	1000.0 ft
Number of pairs	4
Usage characteristics	
Packaging	Box
Field of application	Indoor
Category	Cat. 6
Fire safety	Plenum Rated

All drawings, designs, specifications, plans and particulars of weights, size and dimensions contained in the technical or commercial documentation of Nexans is indicative only and shall not be binding on Nexans or be treated as constituting a representation on the part of Nexans.

Berk-Tek®
A NEXANS COMPANY

Contact
Copper LAN Product Inquiry
Phone: 717-354-6200
berktek.support@nexans.com

LANmark-1000 Enhanced Category 6 Plenum Rated

LANmark-1000 Plenum
Part Number: 10032094

LANmark-1000 Parametric Data: Electrical

	RL (dB)			NEXT (dB)			PSNEXT (dB)		
FREQ MHz	TIA Spec	Product Guarantee	Expected Performance	TIA Spec	Product Guarantee	Expected Performance	TIA Spec	Product Guarantee	Expected Performance
1	20.0	20.0	32.0	74.3	79.3	93.0	72.3	77.3	89.3
4	23.0	23.6	32.9	65.3	70.3	83.5	63.3	68.3	79.8
10	25.0	26.0	35.4	59.3	64.3	77.1	57.3	62.3	73.4
16	25.0	26.0	37.4	56.2	61.3	73.7	54.2	59.3	70.2
20	25.0	26.0	36.8	54.8	59.8	72.8	52.8	57.8	69.0
31.25	23.6	23.5	36.9	51.9	56.9	69.2	49.9	54.9	66.0
62.5	21.5	22.5	34.3	47.4	52.4	65.2	45.4	50.4	61.3
100	20.1	21.6	32.8	44.3	49.3	62.2	42.3	47.3	58.3
150	18.9	21.0	31.5	41.7	46.7	59.2	39.7	44.7	55.3
200	18.0	20.5	31.7	39.8	44.8	57.1	37.8	42.8	53.2
250	17.3	20.1	31.2	38.3	43.4	55.5	36.3	41.4	51.6
300	—	19.8	29.8	—	42.2	54.2	—	40.2	50.4
350	—	—	29.2	—	41.2	52.7	—	39.2	49.0
400	—	—	28.4	—	—	51.7	—	—	47.8
450	—	—	27.4	—	—	49.9	—	—	45.6
500	—	—	26.8	—	—	47.9	—	—	43.6

	IL (dB/100m)			ACR (dB/100m)			PSACR (dB/100m)		
FREQ MHz	TIA Spec	Product Guarantee	Expected Performance	TIA Spec	Product Guarantee	Expected Performance	TIA Spec	Product Guarantee	Expected Performance
1	2.0	2.0	1.7	72.3	77.3	89.4	70.3	75.3	87.5
4	3.8	3.8	3.5	61.5	66.6	77.6	59.5	64.6	76.1
10	6.0	5.9	5.6	53.3	58.4	69.2	51.3	56.4	67.7
16	7.6	7.5	7.1	48.7	53.8	64.6	46.7	51.8	62.9
20	8.5	8.4	8.0	46.3	51.4	62.4	44.3	49.4	61.0
31.25	10.7	10.6	10.0	41.2	46.4	57.5	39.2	44.4	55.7
62.5	15.4	15.3	14.4	32.0	37.1	48.2	30.0	35.1	46.7
100	19.8	19.6	18.4	24.5	29.7	41.2	22.5	27.7	39.6
150	24.7	24.5	22.8	16.9	22.2	33.6	14.9	20.2	32.2
200	29.0	28.8	26.7	10.8	16.0	27.8	8.8	14.0	26.1
250	32.8	32.6	30.1	5.5	10.8	22.7	3.5	8.8	21.0
300	—	36.1	33.1	—	6.1	18.3	—	4.1	16.6
350	—	39.4	36.0	—	1.8	14.4	—	-0.2	12.5
400	—	—	38.7	—	—	10.1	—	—	8.4

All drawings, designs, specifications, plans and particulars of weights, size and dimensions contained in the technical or commercial documentation of Nexans is indicative only and shall not be binding on Nexans or be treated as constituting a representation on the part of Nexans.

Contact
Copper LAN Product Inquiry
Phone: 717-354-6200
berktek.support@nexans.com

LANmark-1000 Enhanced Category 6 Plenum Rated

LANmark-1000 Plenum

450	—	—	41.4	—	—	4.9	—	—	3.5
500	—	—	43.9	—	—	0.0	—	—	-1.2

All swept frequency values above 350 MHz are for engineering purposes only.

LANmark-1000 Parametric Data: Electrical (cont)

	ACRF (dB/100m)			PSACRF (dB/100m)			LCL/TCL	EL TCTL
FREQ MHz	TIA Spec	Product Guarantee	Expected Performance	TIA Spec	Product Guarantee	Expected Performance	Product Guarantee	Product Guarantee

All drawings, designs, specifications, plans and particulars of weights, size and dimensions contained in the technical or commercial documentation of Nexans is indicative only and shall not be binding on Nexans or be treated as constituting a representation on the part of Nexans.

Contact
Copper LAN Product Inquiry
Phone: 717-354-6200
berktek.support@nexans.com

LANmark-1000 Enhanced Category 6 Plenum Rated

LANmark-1000 Plenum

1	67.8	**72.8**	86.8	64.8	**69.8**	83.1	40.0	35.0
4	55.8	**60.7**	74.9	52.8	**57.7**	71.5	40.0	23.0
10	47.8	**52.8**	67.1	44.8	**49.8**	63.5	40.0	15.0
16	43.7	**48.7**	63.0	40.7	**45.7**	59.2	38.0	10.9
20	41.8	**46.8**	61.0	38.8	**43.8**	57.2	37.0	9.0
31.25	37.9	**42.9**	57.3	34.9	**39.9**	53.6	35.1	5.1
62.5	31.9	**36.8**	51.2	28.9	**33.8**	47.6	32.0	—
100	27.8	**32.8**	46.9	24.8	**29.8**	43.5	30.0	—
150	24.3	**29.3**	43.3	21.3	**26.3**	39.6	28.2	—
200	21.8	**26.7**	40.9	18.8	**23.7**	37.1	27.0	—
250	19.8	**24.8**	38.9	16.8	**21.8**	35.2	26.0	—
300	—	**23.2**	37.7	—	**20.2**	33.6	25.2	—
350	—	**21.9**	36.2	—	**18.9**	32.6	24.6	—
400	—	—	34.7	—	—	30.9	24.0	—
450	—	—	33.1	—	—	29.4	23.5	—
500	—	—	32.2	—	—	27.8	23.0	—

All swept frequency values above 350 MHz are for engineering purposes only.

LANmark-1000 Plenum UTP Physical Data

Technical Data - Physical		
Conductor	23 AWG Bare Copper	
Conductor diameter - in. (mm)	0.022	(0.58)
Insulated conductor dia.-in.(mm)	0.037	(1.04)
Cable diameter - in. (mm)	0.226	(5.69)
Nom. cable wt.-lb./kft. (kg/km)	29	(13.2)
Max. installation tension - lb. (N)	25	(110)
Min. bend radius - in. (mm)	1	(25.4)

Color Code		
Pair-1	**White/Blue**	**Blue**
Pair-2	**White/Orange**	**Orange**
Pair-3	**White/Green**	**Green**
Pair-4	**White/Brown**	Brown

Temperature Rating (degrees C)	
Installation	0 to +50
Operation	-20 to +60

LANmark-1000 Plenum Technical Data - Parametric Measurements

Mutual Capacitance	5.6 nF/100 m max.
DC Resistance	9.38 Ohms/100 m max.
Skew	35 ns/100 m max.
Pair to Ground Unbalance	330 pF/100 m max.
Velocity of Propagation	72% nom.
DC Resistance unbalance	5% max.

Supported Category 6 Applications

STANDARD	APPLICATION	SPEED
IEEE 802.3	1000BASE-T	1 Gb/s
TIA/EIA-854	1000BASE-TX	1 Gb/s
ATM	155Mb/s	155 Mb/s

All drawings, designs, specifications, plans and particulars of weights, size and dimensions contained in the technical or commercial documentation of Nexans is indicative only and shall not be binding on Nexans or be treated as constituting a representation on the part of Nexans.

Contact
Copper LAN Product Inquiry
Phone: 717-354-6200
berktek.support@nexans.com

LANmark-1000 Enhanced Category 6 Plenum Rated

LANmark-1000 Plenum

IEEE 802.3	100BASE-TX	100 Mb/s
CDDI		100 Mb/s
IEEE 802.3	10BASE-T	10 Mb/s

Selling delivery information

PLEASE NOTE: In the interest of product improvement, Berk-Tek, a Nexans company may make improvements or changes in the products, the programs or services described at any time without notice. Additionally, the information contained herein may include typographical errors or technical inaccuracies. Changes will be periodically made to address any such issues.

All drawings, designs, specifications, plans and particulars of weights, size and dimensions contained in the technical or commercial documentation of Nexans is indicative only and shall not be binding on Nexans or be treated as constituting a representation on the part of Nexans.