1 SNOW-MELT SYSTEM DEMO PLAN
MD2.01 SCALE: 1/8"=1'-0"

City Of Bend Approval Stamp:

SHEET NOTES:

1. REMOVE (E)SNOW MELT HEAT EXCHANGER, HE-1, AND 1"HWS/1"HWR. CAP AT MAINS. REMOVE (E)2"HWS/2"HWR (GLYCOL) LINES AS SHOWN ON PLAN.
2. (E)SNOWMELT PUMP, SMP-1: REPLACE (E)IMPELLARS WITH NEW 7.8" IMPELLARS FOR INCREASED FLOW. SEE SCHEDULE FOR NEW PERFORMANCE DATA.
3. (E)CHEM FEEDER TO BE RELOCATED TO NEW LOCATION TO MAKE ROOM FOR NEW HE-1 AND PIPING.
4. RELOCATE (E)SMP-1 DISCONNECT/STARTER TO OTHER SIDE OF RACK TO MAKE ROOM FOR NEW PIPING ARRANGEMENT. SEE ELECTRICAL.

#	Date	Description

Revision Schedule

65% PROGRESS SET

PILOT BUTTE MIDDLE SCHOOL - BLDGS E&F

1501 NE Neff Road,
Bend OR 97701

BLRB architects

Drawing Title:
MECHANICAL
SNOWMELT SYSTEM
DEMO PLAN

Date : 11.11.2017	Drawn By : INITIALS
Revised Date :	Project No. 17.34B
Stamp	Sheet No. MD2.01

MFIA INC. Consulting Engineers
2007 S.E. Ash St.
Portland, OR 97214
PHN: (503) 234-0548
FAX: (503) 234-0677
WWW.MFIA-ENG.COM
CONTACT: TAKAKO BAKER

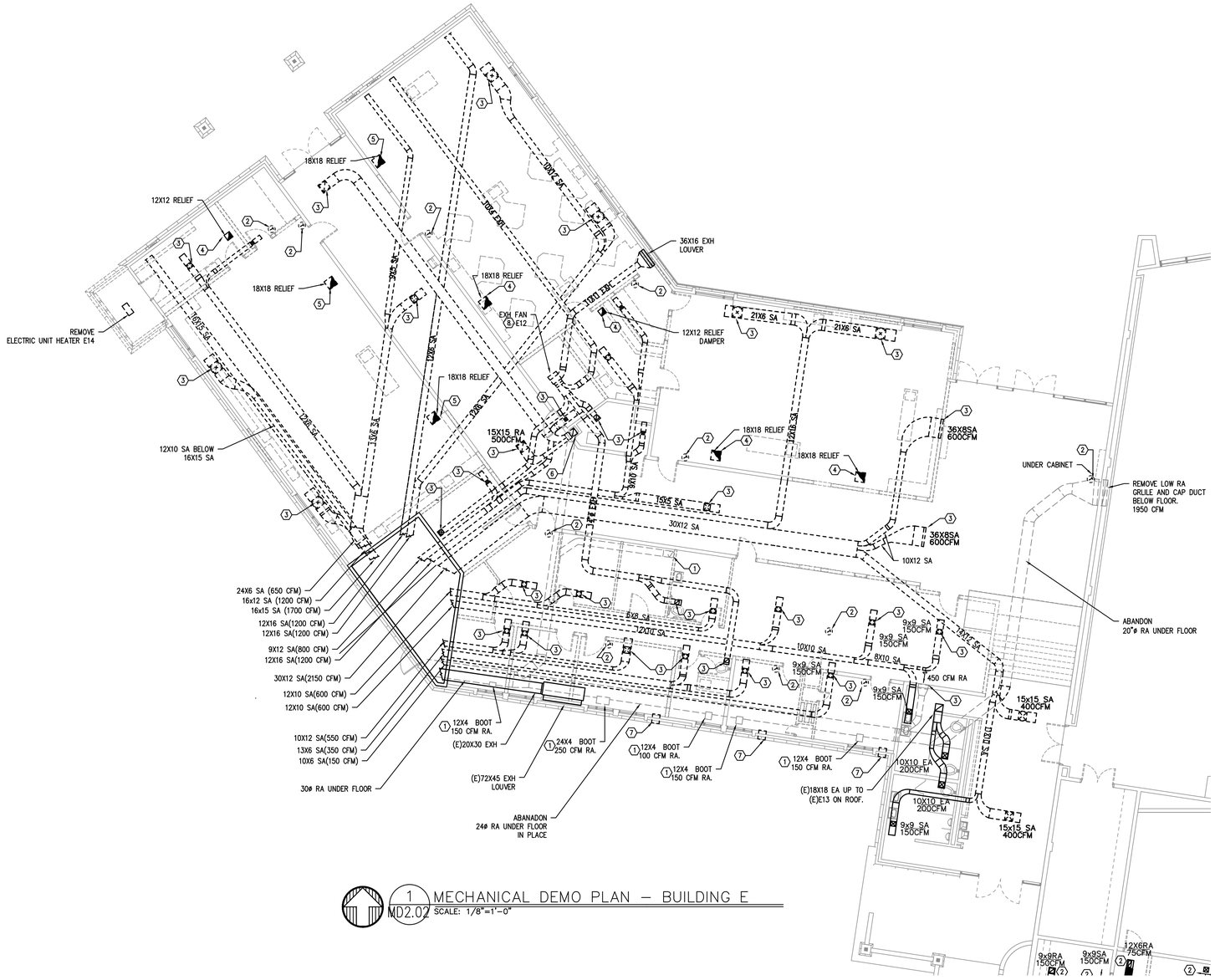

1 MD2.02 MECHANICAL DEMO PLAN – BUILDING E
SCALE: 1/8"=1'-0"

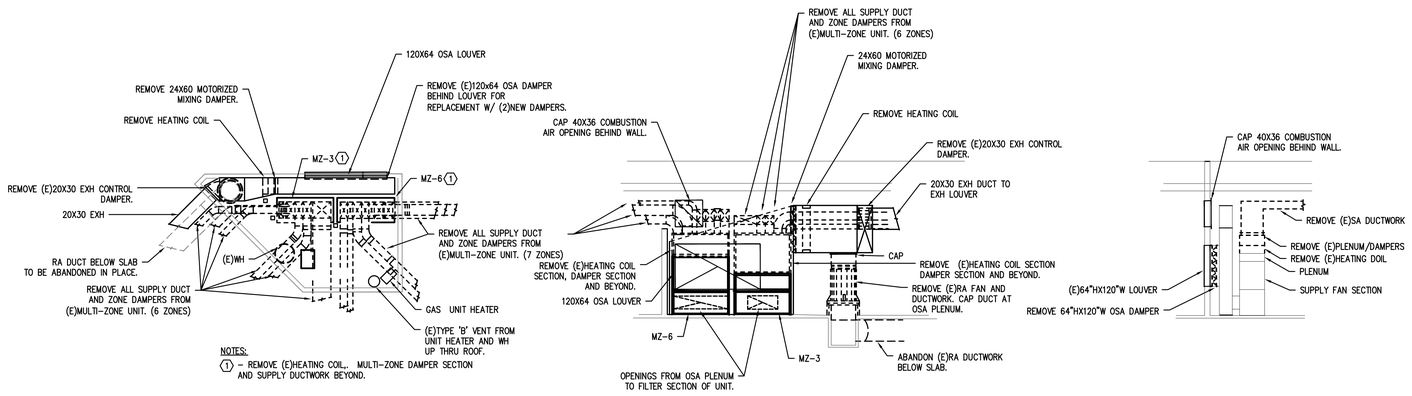

2 MD2.02 MECHANICAL ROOM DEMO DETAIL
SCALE: 1/8"=1'-0"

City Of Bend Approval Stamp:

KEYED NOTES:
1. REMOVE LOW RA GRILLE AT CABINET AND CAP OFF DUCT BELOW FLOOR. COORDINATE FLOOR PATCH WITH ARCHITECT.
2. REMOVE (E) T-STAT AND PATCH WALL. COORDINATE WALL PATCH WITH ARCHITECT.
3. REMOVE (E)GRILLE/DIFFUSER.
4. DEMO RELIEF GRILLE AND DUCT UP THRU ROOF. CAP CURB AT ROOF.
5. REMOVE (E)RELIEF GRILLE AND DUCT. RETAIN (E)RELIEF HOOD ON ROOF FOR NEW CONNECTION.
6. CAP OFF RA DUCT ABOVE CEILING OUTSIDE OF CHASE. ABANDON RA DUCT DOWNSTREAM IN PLACE.
7. REMOVE (E)THRU THE WINDOW AC. COORDINATE WALL PATCH WITH ARCH.
8. REMOVE (E)EXH FAN, E-12.

SHEET NOTES:
1. ASBESTOS ABATEMENT CONTRACTOR TO REMOVE ALL DUCTWORK OUTSIDE OF MECHANICAL ROOM..

#	Date	Description

Revision Schedule

65% PROGRESS SET

PILOT BUTTE MIDDLE SCHOOL - BLDGS E&F
1501 NE Neff Road,
Bend OR 97701

BLRB architects

Drawing Title:
MECHANICAL DEMO PLAN - BUILDING E

Date : 11.11.2017	Drawn By : INITIALS
Revised Date :	Project No. 17.34B
Stamp	Sheet No. MD2.02

MFIA INC. Consulting Engineers
2007 S.E. Ash St.
Portland, OR 97214
PHN: (503) 234-0548
FAX: (503) 234-0677
WWW.MFIA-ENG.COM
CONTACT: TAKAKO BAKER

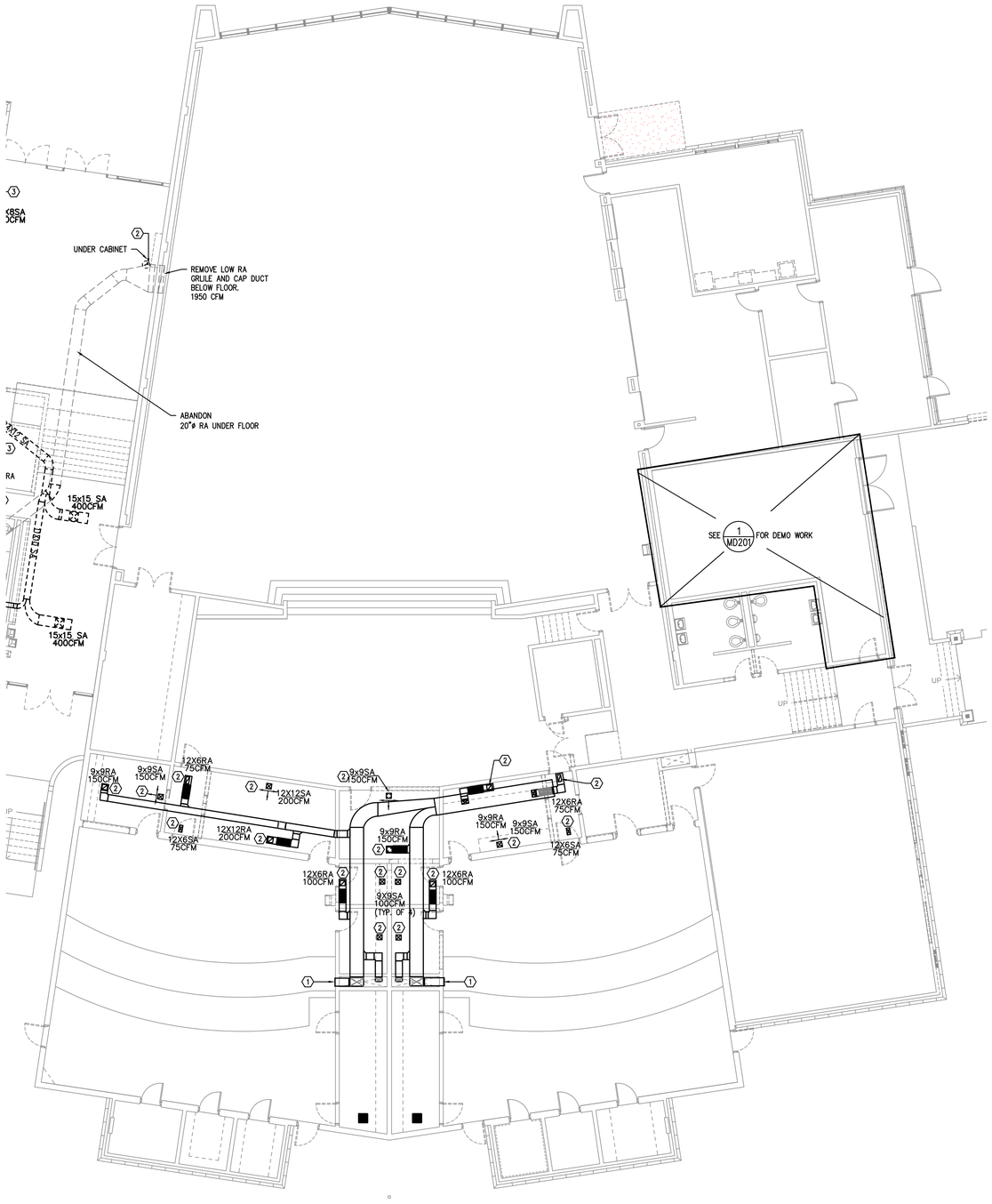

1 MD2.03 MECHANICAL DEMO PLAN – BUILDING F
SCALE: 1/8"=1'-0"

City Of Bend Approval Stamp:

KEYED NOTES:
1. REMOVE LOW RA GRILLE AND REINSTALL @ 6" ABOVE NEW FINISHED FLOOR ELEVATION.
2. REMOVE EXISTING RA GRILLE/SA DIFFUSER FOR INSTALLATION AT NEW RAISED CEILING. MODIFY EXISTING SHEETMETAL BRANCH DUCT TO DIFFUSER/GRILLE AS NECESSARY.

#	Date	Description

Revision Schedule

65% PROGRESS SET

PILOT BUTTE MIDDLE SCHOOL - BLDGS E&F
1501 NE Neff Road,
Bend OR 97701

BLRB architects

Drawing Title:
MECHANICAL DEMO PLAN - BUILDING F

Date : 11.11.2017	Drawn By : INITIALS
Revised Date :	Project No. 17.34B
Stamp	Sheet No. MD2.03

MFIA INC. Consulting Engineers
2007 S.E. Ash St.
Portland, OR 97214
PHN: (503) 234-0548
FAX: (503) 234-0677
WWW.MFIA-ENG.COM
CONTACT: TAKAKO BAKER

City Of Bend Approval Stamp:

KEYED NOTES:

1. CONNECT (N)2-1/2"HWS/HWR (GLYCOL) TO (E)2"HWS/HWR (GLYCOL) MAINS.
2. (E)SMP-1 WITH NEW 7.6" IMPELLARS.
3. CONNECT (N)2"HWS/HWR TO (E) MAINS.
4. RELOCATED CHEM FEEDER FOR (E)BOILER SYSTEM, SEE 6/M6.03 FOR DETAIL.
5. CONNECT (N)3/4"HWS/HWR TO (E)MAINS AND ROUTE TO RELOCATED CHEM FEEDER.

Surface Temp	38	degree F
Propylene Glycol	45	%
Supply Temperature	132	degree F

hePEX tubing
3/4", 9" on center

ZONE A	Installation Area (sqft)	BTUH/sqft	Total Btuh	Amt of Tubing (ft) (area x 1.33)	# of loops @300' / loop	Active Loop Length (ft)	Total Loop Length (25ft leader length)	GPM/loop (0.0083gpm/ft) @ gpm per loop	Pressure Loss ('h20/foot)	Head Loss Per loop (ft H2O)	MANIFOLD LOCATION
LOOP 1	200	136	27200	266	1	266	291	2.4	0.04	12	ZONE A
LOOP 2	200	136	27200	266	1	266	291	2.4	0.04	12	
LOOP 3	200	136	27200	266	1	266	291	2.4	0.04	12	
LOOP 4	200	136	27200	266	1	266	291	2.4	0.04	12	
LOOP 5	200	136	27200	266	1	266	291	2.4	0.04	12	
TOTAL	**1000**		**136000**	**1330**	**5**		**1455**	**12.1**			

ZONE F2	Installation Area (sqft)	BTUH/sqft	Total Btuh	Amt of Tubing (ft) (area x 1.33)	# of loops @300' / loop	Active Loop Length (ft)	Total Loop Length (25ft leader length)	GPM/loop (0.0083gpm/ft) @ gpm per loop	Pressure Loss ('h20/foot)	Head Loss Per loop (ft H2O)	MANIFOLD LOCATION
LOOP 1	210	136	28560	279	1	279	304	2.6	0.042	13	ZONE F2
TOTAL	**210**	**136**	**28560**	**279**	**1**		**304**	**2.6**			

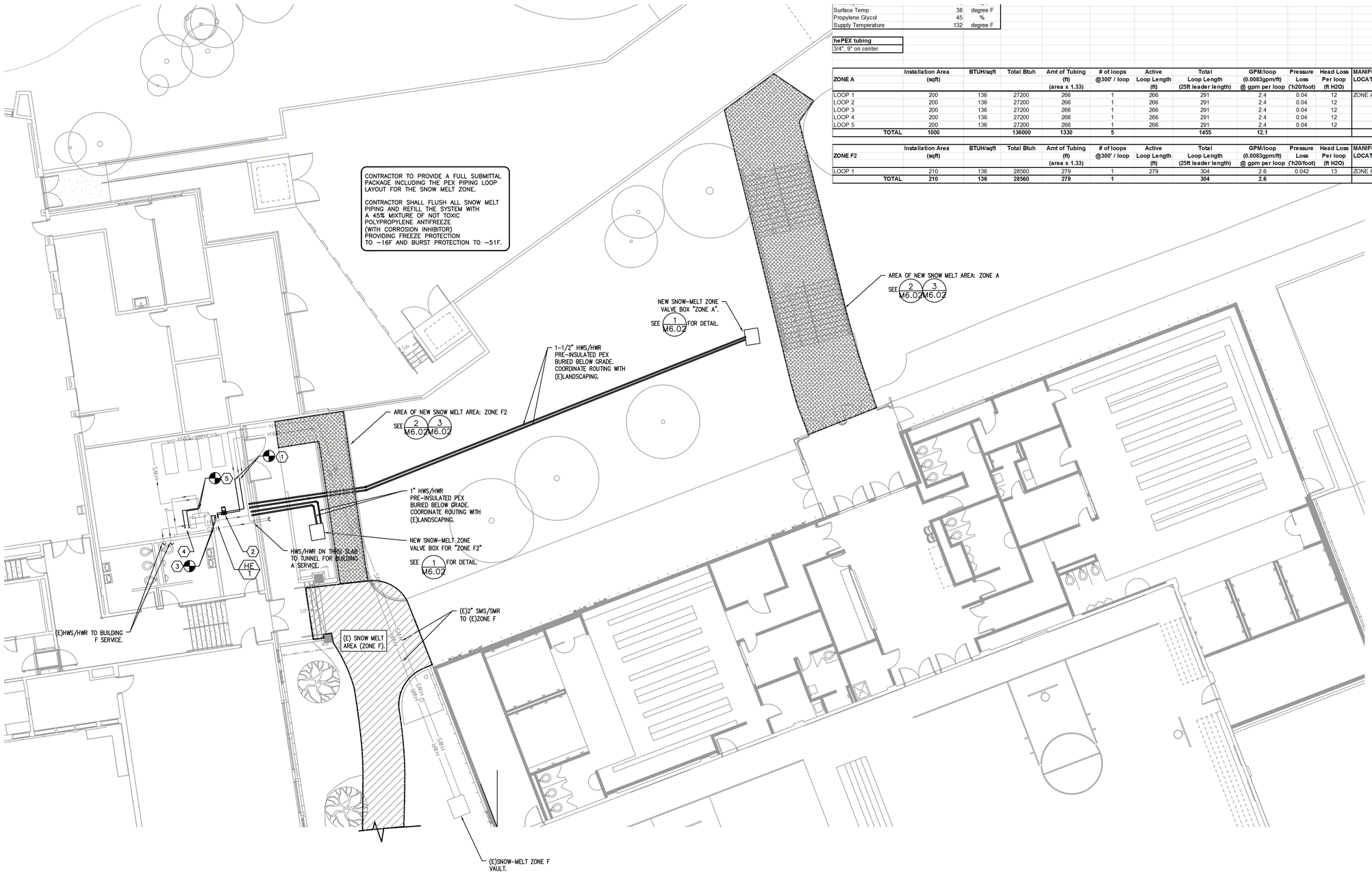

1/M2.01 SNOW-MELT/BUILDING A-VESTIBULE
SCALE: 1/8"=1'-0"

#	Date	Description
Revision Schedule		

65% PROGRESS SET

PILOT BUTTE MIDDLE SCHOOL - BLDGS E&F
1501 NE Neff Road,
Bend OR 97701

BLRB architects

Drawing Title:
MECHANICAL
SNOWMELT SYSTEM

Date : 11.11.2017	Drawn By : INITIALS
Revised Date :	Project No. 17.34B
Stamp	Sheet No. M2.01

MFIA INC. Consulting Engineers
2007 S.E. Ash St.
Portland, OR 97214
PHN: (503) 234-0548
FAX: (503) 234-0677
WWW.MFIA-ENG.COM
CONTACT: TAKAKO BAKER

1 M2.02A MECHANICAL FLOOR PLAN – BUILDING E
SCALE: 1/8"=1'-0"

City Of Bend Approval Stamp:

KEYED NOTES:

1. 18X18 EXHAUST UP THRU (E)PENETRATION AND CONNECT TO (E)RELIEF HEAD ON ROOF.
2. BALANCE (E)GRILLE TO AIRFLOW SHOWN.
3. 16x4 RA IN WALL TO LOW RA GRILLE.
4. 12X4 RA IN WALL TO 12X6 LOW RA GRILLE @ 6"A.F.F. BALANCE GRILLE TO 150 CFM.
5. 18X12 RA IN CHASE TO 18X48 LOW RA GRILLE, 1200 CFM. INSTALL @ 6" A.F.F.
6. 16X8 RA DN IN CHASE TO 16X16 LOW RA GRILLE @ 6"A.F.F. BALANCE TO 500CFM.
7. NEW EQUIPMENT TAG #.
8. REPLACE (E)3-HP SUPPLY FAN MOTOR WITH A NEW INVERTOR RATED MOTOR. PROVIDE A NEW FAN CONTROL.
9. REPLACE (E)5-HP SUPPLY FAN MOTOR WITH A NEW INVERTOR RATED MOTOR. PROVIDE A NEW FAN CONTROL.
10. LINEAR SLOT DIFFUSER. (4)" SLOT WITH 10"ø INLET. PRICE SDB SERIES OR APPROVED EQUAL.
11. 2-POSITION CONTROL DAMPER TO CLOSE UPON ACTIVATION OF EXHAUST FAN IN RESPECTIVE SCIENCE CLASSROOM.
12. 18X18 EXH DUCT UP THRU ROOF TO NEW RELIEF HEAD ON ROOF. SEE 9/M6.02 FOR DETAIL.
13. PROVIDE SLEEVE FOR FUTURE COOLING COIL. PROVIDE MINIMUM 30" OF STRAIGHT DUCT RUN PRIOR TO THE COIL.
14. 2-POSITION CONTROL DAMPER TO OPERATE WITH ASSOCIATED EXH FAN.
15. 12"øSA 500CFM
16. 12X4 RA DN IN WALL TO 12X6 LOW RA GRILLE @ 6" A.F. BALANCE GRILLE TO 180 CFM.
17. VAV DAMPER TO OPEN TO 100% COOLING AIRFLOW UPON ACTIVATION OF RESPECTIVE EXHASUT FAN IN SCIENCE CLASSROOM.
18. 6"øSA 100CFM
19. CONNECT TO (E)DUCTWORK.
20. CONNECT (N)RA DUCT TO (E)EXH PLENUM.

GENERAL NOTES:

1. WHERE THE PENETRATION AT THE CORRIDOR WALL IS A THROUGH-PENETRATION, INSTALL MINIMUM OF 26 GA SHEETMETAL AND PROTECT OPENINGS PER UL1479, SEE DETAIL ON SHEET M6.03.
2. SEE M2.02B FOR T-STAT, CO2 SENSORS, AND LOCATION OF WALL SWITCHES FOR EXHAUST FAN CONTROL.

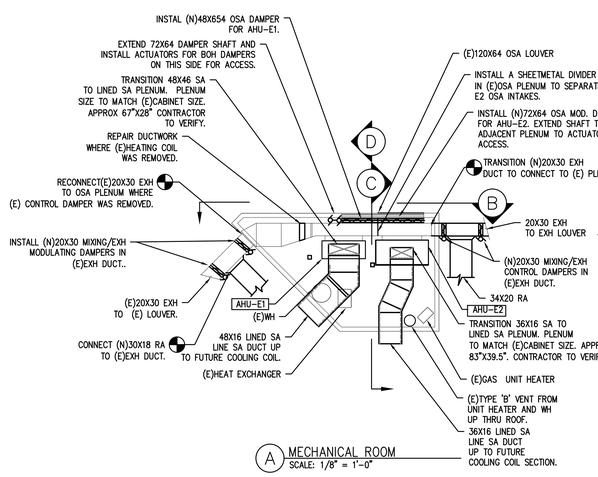

A MECHANICAL ROOM
SCALE: 1/8" = 1'-0"

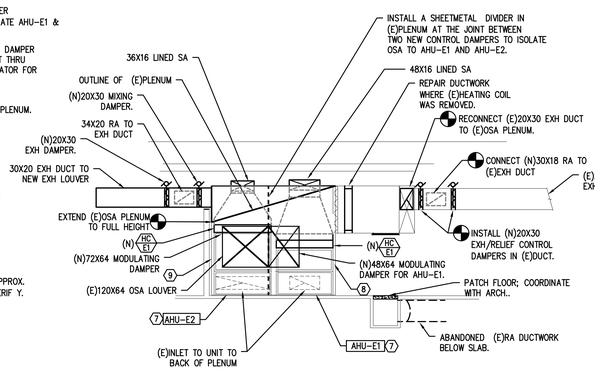

B SECTION B
SCALE: 1/8" = 1'-0"

2 M2.02A MECHANICAL ROOM DETAIL
SCALE: 1/8"=1'-0"

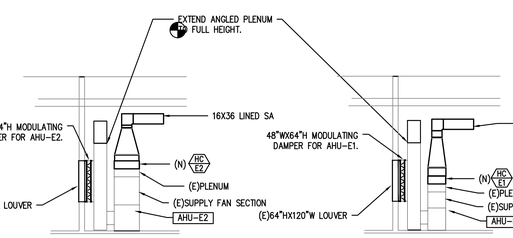

C SECTION AHU-E2
SCALE: 1/8" = 1'-0"

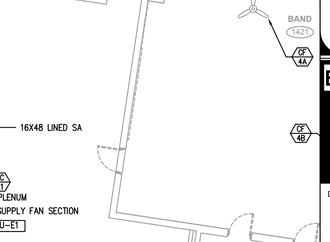

D SECTION AHU-E1
SCALE: 1/8" = 1'-0"

#	Date	Description

Revision Schedule

65% PROGRESS SET

PILOT BUTTE MIDDLE SCHOOL - BLDGS E&F
1501 NE Neff Road,
Bend OR 97701

BLRB architects

Drawing Title:
MECHANICAL FLOOR PLAN - BUILDING E

Date : 11.11.2017	Drawn By : INITIALS
Revised Date :	Project No. 17.34B
Stamp	Sheet No. M2.02A

MFIA INC. Consulting Engineers
2007 S.E. Ash St.
Portland, OR 97214
PHN: (503) 234-0548
FAX: (503) 234-0677
WWW.MFIA-ENG.COM
CONTACT: TAKAKO BAKER

City Of Bend Approval Stamp:

KEYED NOTES:
1. ON/OFF SWITCH FOR EF-3. SEE ELECTRICAL.
2. ON/OFF SWITCH FOR EF-1. SEE ELECTRICAL.
3. ON/OFF SWITCH FOR EF-2. SEE ELECTRICAL.
4. CEILING FAN CONTROLLER, SEE ELECT.

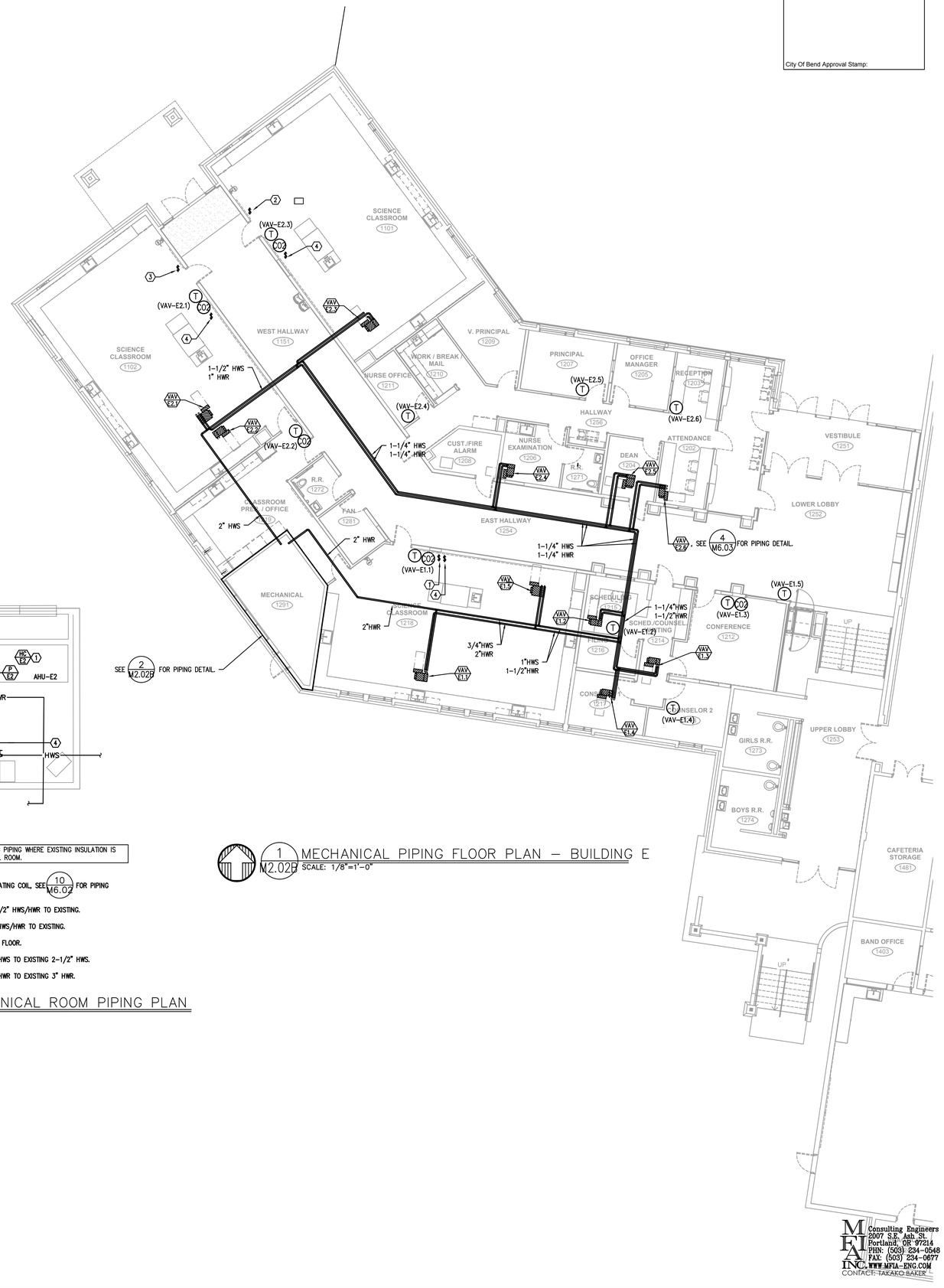

1 M2.02B MECHANICAL PIPING FLOOR PLAN – BUILDING E
SCALE: 1/8"=1'-0"

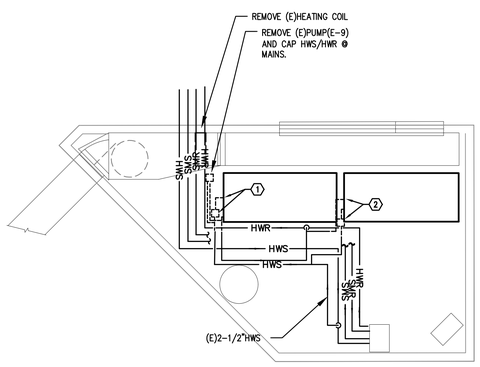

DEMO NOTES:

1. –REMOVE (E)HEATING COIL(E-4). ASSOCIATED PUMP (E-5), CONTROL VALVE, ETC FOR CONNECTION TO NEW HEATING COIL.
2. –REMOVE (E)HEATING COIL(E-7),ASSOCIATED PUMP (E-8), CONTROL VALVE, ETC FOR CONNECTION TO NEW HEATING COIL.

2 M2.02B ENLARGED MECHANICAL ROOM PIPING DEMO PLAN
SCALE: 1/8"=1'-0"

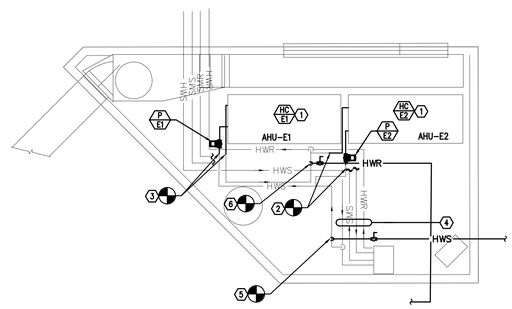

PROVIDE OR REPAIR INSULATION ON EXISTING PIPING WHERE EXISTING INSULATION IS DAMAGED OR IN MISSING IN THE MECHANICAL ROOM.

NOTES:

1. – INSTALL NEW HEATING COIL, SEE 10 M6.02 FOR PIPING DETAIL.
2. – CONNECT (N)1-1/2" HWS/HWR TO EXISTING.
3. – CONNECT (N)1" HWS/HWR TO EXISTING.
4. – (E) PIPING NEAR FLOOR.
5. – CONNECT (N)2" HWS TO EXISTING 2-1/2" HWS.
6. – CONNECT (N)2" HWR TO EXISTING 3" HWR.

3 M2.02B ENLARGED MECHANICAL ROOM PIPING PLAN
SCALE: 1/4"=1'-0"

#	Date	Description

Revision Schedule

65% PROGRESS SET

PILOT BUTTE MIDDLE SCHOOL - BLDGS E&F
1501 NE Neff Road,
Bend OR 97701

BLRB architects

Drawing Title:
MECHANICAL PIPING PLAN - BUILDING E

Date : 11.11.2017	Drawn By : INITIALS
Revised Date :	Project No. 17.34B
Stamp	Sheet No. M2.02B

MFIA INC. Consulting Engineers
2007 S.E. Ash St.
Portland, OR 97214
PHN: (503) 234-0548
FAX: (503) 234-0677
WWW.MFIA-ENG.COM
CONTACT: TAKAKO BAKER

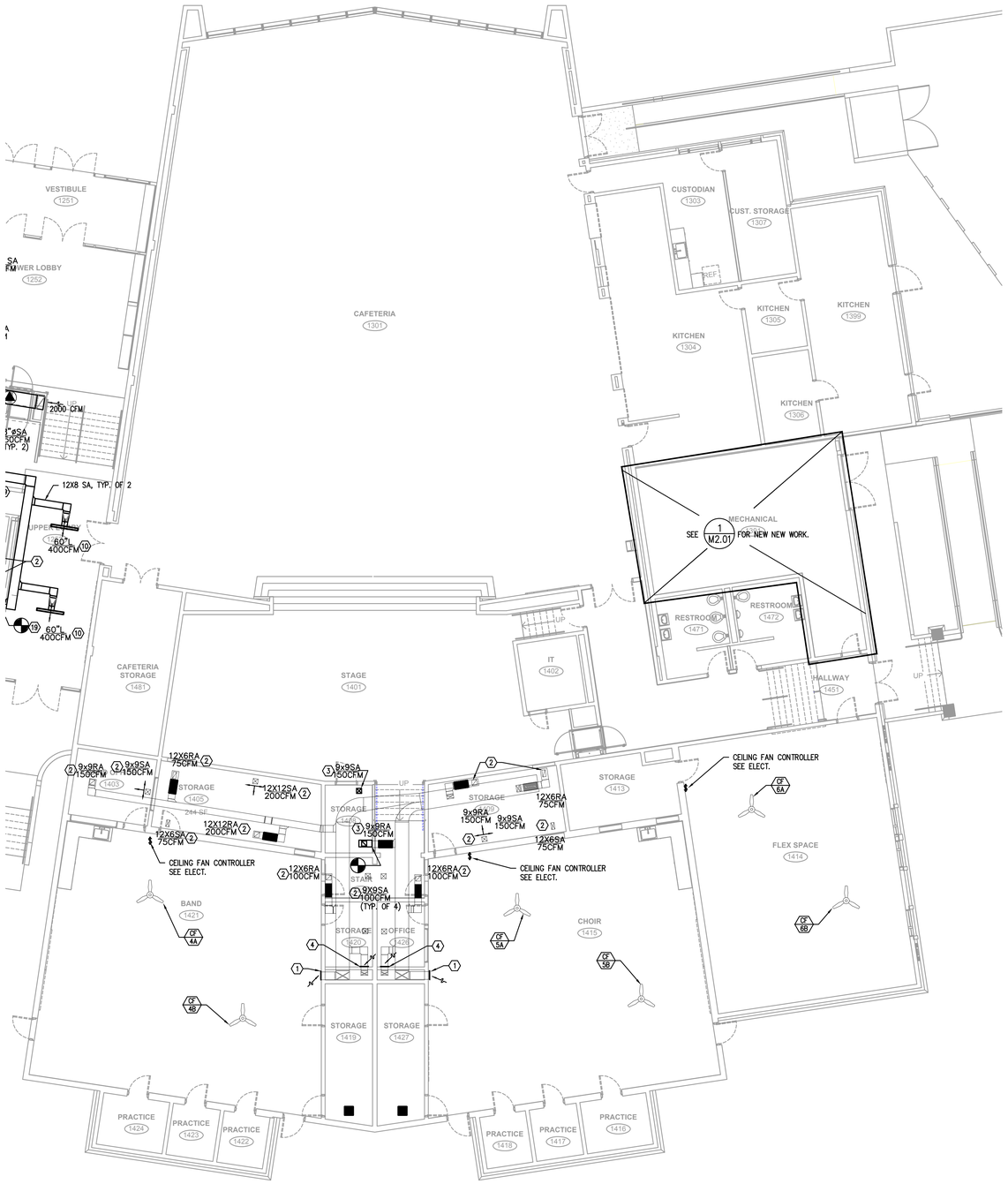

1 M2.03 MECHANICAL FLOOR PLAN – BUILDINGS F
SCALE: 1/8"=1'-0"

City Of Bend Approval Stamp:

KEYED NOTES:

1. REMOVE & RE-INSTALL (E)12X48 LOW RA GRILLE @ 6" ABOVE NEW FLOOR ELEVATION. REABALANCE GRILLE @ 2400 CFM.
2. RE-INSTALL (E)SA/RA GRILLES AT NEW CEILING HEIGHT AND BALANCE TO AIRFLOW SHOWN.
3. EXTEND (E)SHEETMETAL DUCT TO NEW DIFFUSER LOCATION AND BALANCE TO AIRFLOW SHOWN.
4. REMOVE & RE-INSTALL (E)12X6 LOW RA GRILLE @ 6" ABOVE NEW FLOOR ELEVATION. REBALANCE RA GRILLE AT 100 CFM.
5.

GENERAL NOTES:

#	Date	Description
Revision Schedule		

65% PROGRESS SET

PILOT BUTTE MIDDLE SCHOOL - BLDGS E&F
1501 NE Neff Road,
Bend OR 97701

BLRB architects

Drawing Title:
MECHANICAL FLOOR PLAN - BUILDG F

Date : 11.11.2017	Drawn By : INITIALS
Revised Date :	Project No. 17.34B
Stamp	Sheet No. M2.03

MFIA INC.
Consulting Engineers
2007 S.E. Ash St.
Portland, OR 97214
PHN: (503) 234-0548
FAX: (503) 234-0577
WWW.MFIA-ENG.COM
CONTACT: TAKAKO BAKER

MECHANICAL LEGEND

- SUPPLY AIR DIFFUSER
- RETURN AIR DIFFUSER
- EXHAUST AIR DIFFUSER
- DIRECTIONAL AIR FLOW
- MANUAL VOLUME DAMPER
- SUPPLY AIR DUCT UP & DOWN
- RETURN AIR DUCT UP & DOWN
- EXHAUST OR OUTSIDE AIR DUCT UP & DOWN
- SUPPLY AIR DUCT UP & DOWN
- RETURN AIR DUCT UP & DOWN
- EXHAUST OR OUTSIDE AIR DUCT UP & DOWN
- VAV TERMINAL UNIT W/ REHEAT COIL
- DUCT SMOKE SENSOR
- DIFFERENTIAL PRESSURE SENSOR
- CONNECT TO EXISTING
- THERMOSTAT
- TEMPERATURE SENSOR
- NOTE
- EQUIPMENT DESIGNATOR
- GATE VALVE
- CHECK VALVE
- BALANCING VALVE
- THERMOMETER
- DIRECTION OF FLOW
- PUMP
- STRAINER
- PRESSURE GUAGE
- PETE'S PLUG
- DOUBLE CHECK ASSEMBLY
- PRESSURE REDUCING VALVE
- UNION
- 2-WAY CONTROL VALVE
- 3-WAY CONTROL VALVE
- CAP
- MOTORIZED DAMPER
- BALL SHUT OFF VALVE
- FIRE DAMPER
- FIRE / SMOKE DAMPER
- SMOKE DAMPER

AFF	ABOVE FINISH FLOOR
AHU	AIR HANDLING UNIT
B.D.	BOTTOM OF DUCT
BHP	BRAKE HORSEPOWER
BOG	BOTTOM OF GRILLE
BTU	BRITISH THERMAL UNITS
CFM	CUBIC FEET PER MINUTE
CONN.	CONNECTION
CONT.	CONTINUATION
CW	DOMESTIC COLD WATER
DB	DRY BULB
DIA.	DIAMETER
DIST.	DISTRIBUTION
EXH	EXHAUST AIR
EDB	ENTERING DRY BULB TEMPERATURE
EWB	ENTERING WET BULB TEMPERATURE
EWT	ENTERING WATER TEMPERATURE
FF	FINISH FLOOR
FIXT.	FIXTURE
F.O.B.	FLAT ON BOTTOM
FPM	FEET PER MINUTE
FPS	FEET PER SECOND
FT.	FEET / FOOT
GA.	GAUGE
GEXH	GREASE EXHAUST AIR DUCT
GPM	GALLONS PER MINUTE
H	HEIGHT
HP	HORSEPOWER
I.D.	INSIDE DIAMETER
IN.	INCHES
L	LENGTH
LBS.	POUNDS
LDB	LEAVING DRY BULB
LWB	LEAVING WET BULB
LWT	LEAVING WATER TEMPERATURE
MA	MAKE UP AIR
MAX.	MAXIMUM
MBH	THOUSANDS OF BTUs PER HOUR
MD	MOTORIZED DAMPER
MIN.	MINIMUM
MVD	MANUAL VOLUME DAMPER
NC	NOISE CRITERIA
N.C.	NORMALLY CLOSED
N.I.M.	NOT IN MECHANICAL
NO.	NUMBER
N.O.	NORMALLY OPEN
O.A.	OUTSIDE AIR
P	PERSON
PSI	POUNDS PER SQUARE INCH
P/T	PRESSURE / TEMPERATURE
R.A.	RETURN AIR
RECT.	RECTANGULAR
REQ'D	REQUIRED
S.A.	SUPPLY AIR
S.P.	STATIC PRESSURE
SQ.	SQUARE
TEMP.	TEMPERATURE
TYP.	TYPICAL
VAV	VARIABLE AIR VOLUME
W	WIDTH
WB	WET BULB
WPD	WATER PRESSURE DROP
ø	DIAMETER

T/A SERIES 794 DIFFERENTIAL PRESSURE CONTROLLER — PILOT TUBE — BALANCING VALVE, T/A STAD SERIES

HWS	(HWS) HEATING WATER SUPPLY
	(HWR) HEATING WATER RETURN
	(HWRR) HEATING WATER REVERSE RETURN
CHS	(CHS) CHILLED WATER SUPPLY
CHR	(CHR) CHILLED WATER RETURN
PC	PUMPED CONDENSATE
S	(HPS) HIGH PRESSURE STEAM
V4	(HT) HEAT TRACED DOMESTIC HOT WATER
SMR	(SMR) SNOWMELT RETURN
SMS	(SMS) SNOWMELT SUPPLY

AIR DISTRIBUTION DETAILS

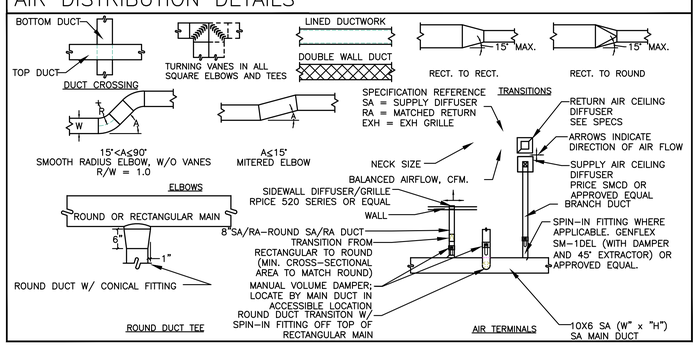

HEATING WATER COIL

MARK NUMBER	HC E1	HC E2
DESIGN ELEVATION, FEET	3,500	3,500
AREA SERVED	BUIDLING E	
SYSTEM	AHU-E1	AHU-E2
HEATING CFM	2700	4545
COOLING CFM	4200	6185
ENTERING AIR TEMP (°F.)	32.6	
LEAVING AIR TEMP (°F.)	60.2	
ENTERING WATER TEMP. (°F.)	140	140
LEAVING WATER TEMP (°F.)	110	110
TOTAL CAPACITY (MBH)	71.2	
FLOW RATE (GPM)	4.7	
FACE AREA (SQ FT)	10.1	
MAX. FACE VELOCITY (FPM@COOLING CFM)	500	
MIXING VALVE TYPE	3-WAY	3-WAY
CONNECTION SIZE, INCH	1.5"	
MIN ROWS	1	3
FIN DIMS, HXL, INCHES	27X54	
MAX APD ("H20 @ COOLING CFM)	0.06	
MAX. FLUID PRESSURE DROP, FT. W.C.	0.4	

RETURN FANS

MARK NUMBER	RF E1	RF E2
DESIGNED ELEVATION, FT	3500 FT	
TYPE	IN-LINE	IN-LNE
SYSTEM	AHU-E1	AHU-E2
CFM	3995	5410
TOTAL SP. (IN H20)	0.75	0.75
DRIVE	DD	DD
VFD	YES	YES
FAN RPM	951	1095
MOTOR HP	5	5
CONTROLLED BY	DDC	DDC
INTERLOCK WITH	AHU-E1	AHU-E2
BACK DRAFT DAMPER/MOTORIZED DAMPER	-/-	-/-
ISOLATION	FIS	YES
DESIGN WEIGHT (LBS)	370	370
MAX. SONES(INLET/OUTLET)	11.8/13.2	14.2/15.8
DISCHARGE/CONFIGURATION	INLINE	INLINE
		YES
BASIS OF DESIGN: GREENHECK	QEID-20-90-A50	QEID-20-90-A50

PUMPS

MARK NUMBER	SMP 1	P E1	P E2
SERVICE	HE-1 COLD SIDE	AHU-E1/ HC-E1	AHU-E2/ HC-E2
DESIGNED ALTITUDE, FT	3500 FT	3500 FT	3500 FT
ARRANGEMENT	EXISTING PUMP	CENTRIFUGAL IN-LINE	CENTRIFUGAL IN-LINE
STARTER TYPE	STARTER	STARTER	STARTER
FLOW RATE (GPM)	46		
HEAD (FT)	65		
MOTOR HP	2	1/4	1/4
RPM	1750	1750	1750
CONTROLLED BY	DDC	DDC	DDC
FLUID	45% PROPYLENE GLYCOL		
SUCTION PIPE SIZE	(E)		
DISCHARGE PIPE SIZE	(E)		
EFF @ FULL DESIGN FLOW	(E)		
BASE DESIGN MODEL, TACO:	KV1509		

* EXISTING PUMP. REPLACE (E)IMPELLARS WITH NEW 7.8" IMPELLARS AND BALANCE TO NEW FLOW.

City Of Bend Approval Stamp:

EXHAUST FANS

MARK NUMBER	EF E1	EF E2	EF E3	EF E4	EF E5
DESIGNED ELEVATION, FT	3500 FT				
TYPE	CABINET	CABINET	CABINET	CABINET	CABINET
SYSTEM	SCIENCE 1101	SCIENCE 1102	SCIENCE 1218	SCIENCE PREP	R.R.
CFM	1400	1400	1400	500	350
TOTAL SP. (IN H20)	0.50	0.50	0.50	0.50	0.50
DRIVE	DD	DD	DD	DD	DD
VFD	NO	NO	NO	NO	NO
FAN RPM	1590	1590	1590	883	807
MOTOR HP	738 W	738 W	738 W	160 W	106 WATTS
CONTROLLED BY	TIMER SWITCH	TIMER SWITCH	TIMER SWITCH	DDC	DDC
INTERLOCK WITH					
WHEEL TYPE	FC	FC	FC	FC	F.C.
BACK DRAFT DAMPER/MOTORIZED DAMPER	-/YES	-/YES	-/YES	-/YES	-/YES
ISOLATION	RIS	RIS	RIS	RIS	RIS
DESIGN WEIGHT (LBS)	60	60	60	35	35
MAX. SONES	4.0	4.0	4.0	7.7	1
NOTES:	1,2,3	1,2,3	1,2,3	1,3	1,3
BASIS OF DESIGN: GREENHECK	CSP-A1550	CSP-A1550	CSP-A1550	CSP-A700	CSP-A700

1. PROVIDE WITH SPEED CONTROL NEAR FAN FOR BALANCING
2. ON/OFF WITH TIMER SWITCH. SEE ELECTRICAL.
3. PROVIDE MOTORIZED DAMPER IN THE DISCHARGE DUCT.

EXISTING AHU

MARK NUMBER		
DESIGNED ELEVATION, FT	3500 FT	
TYPE	EXISTING	EXISTING
SYSTEM	CLASSROOM	ADMIN
CFM	6135 CFM	4400
TOTAL SP. (IN H20)	2.50"	2.25"
DRIVE	BELT	BELT
VFD	*YES	*YES
FAN RPM	1395	1395
MOTOR HP	*5 HP	*3 HP
CONTROLLED BY	DDC	DDC
WHEEL TYPE	B.I.	B.I.
ECONOMIZER	YES	YES
EXISTING UNIT: PACE	B15 VS1MZ7	B11 VS1MZ7

* PROVIDE A NEW INVERTOR RATED MOTOR AND A VFD.
* REPLACE (E)BELT AND SHEAVES AND CLEAN CABINET & FAN????
* ~~STATIC PRESSORE SHOWN ASCOUNTS FOR FUTURE COOLING COIL.~~

CEILING FANS

MARK NUMBER	CF 1A / CF 1B	CF 2A / CF 2B	CF 3A / CF 3B	CF 4A / CF 4B	CF 5A / CF 5B	CF 6A / CF 6B
ROOM	SCIENCE 1102	SCIENCE 1101	SCIENCE 1218	BAND 1421	CHOIR 1415	FLEX 1414
MOUNTING	CEILING HUNG	CEILING HUNG	CEILING HUNG	CEILING HUNG	CEILING HUNG	CEILING HUNG
BLADE DIAMETER/FAN HEIGHT	52"/-	52"/-	52"/-	52"/-	52"/-	52"/-
CONTROLLED BY:	HAIKU L-SERIES HARD WIRED WALL CONTROL (1 CONTROLLER PER ROOM)					
MOUNTING HEIGHT (FROM CEILING)						
DESIGN WEIGHT (LBS)	11 LBS	11 LBS	11 LBS	11 LBS	11 LBS	11 LBS
DESIGNED MODEL: BIG ASS FAN/HAIKU	L-SERIES	L-SERIES	L-SERIES	L-SERIES	L-SERIES	L-SERIES

WATER TO WATER HEAT EXCHANGER

MARK NUMBER		HE 1
DESIGNED ALTITUDE, FT		3,500
TYPE		PLATE & FRAME
SYSTEM		SNOW MELT
CAPACITY, MBH		535
DIMENSION		4.9"WX13.2"HX6.5"D
COLD SIDE	GPM	46
	ENT. WATER (° F.)	140
	LVG. WATER (° F.)	114
	MAX PRESS DROP, FT. H20	6 FT
	% PROPYLENE GLYCOL	45%
HOT SIDE	GPM	28
	ENT. WATER (° F.)	180
	LVG. WATER (° F.)	140
	MAX PRESS DROP, FT. H20	2
OPERATING WEIGHT, LBS		25
BASIS OF DESIGN: PHE		GBS400H-70

NOTES:
1. SNOW MELT SYSTEM SHALL BE TREATED TO 40% PROPYLENE GLYCOL.
2. SPACE FOR NEW HEAT EXCHANGER AND PIPING IS LIMITED. IF UNIT WITH DIFFERENT DIMENSIONS IS PROVIDED, CONTRACTOR TO VERIFY EQUIPMENT FIT WITH EXISTING SITE CONDITIONS.

VENTILATION AIR SCHEDULE - AHU-E1

ROOM NUMBER AND NAME	AREA (SQ. FT.)	OCCUPANT LOAD (#/1000 SQ. FT.)	NUMBER OF OCCUPANTS	OUTSIDE AIR REQUIREMENT (CFM/P)	OUTSIDE AIR REQUIREMENT (CFM/SQ FT.)	OUTSIDE AIR REQUIRED (CFM)		ZONE OSA (CFM)	SUPPLY AIR (CFM)	PRIMARY OSA FRACTION	RETURN AIR (CFM)	EXHAUST AIR (CFM)	Zone Ventilation Efficiency	Corrected OSA CFM	AIR SYSTEMS
	Az		Pz	Rp	Ra	Vbz	Ez	Voz	Vpz	Zp			Evz		
SCIENCE CLASSROOM 1218	1100	35	39	10	0.12	522	1.0	522	1200	0.44	1200	0	0.91	576.69	VAV E1.1
SCHEDULING 1215	102	5	1	5	0.06	11	1.0	11	175	0.06	175	0	1.28	12.29	VAV E1.2
FILING 1216	61	5	1	5	0.06	9	1.0	9	75	0.12	75	0	1.22	9.57	VAV E1.2
CONFERENCE 1212	252	50	13	5	0.06	80	1.0	80	300	0.27	300	0	1.07	88.51	VAVE1.3
GIRLS RR 1273	140	0	0	0	0	0	1.0	0	150	0.00	0	200	1.34	0.00	VAV E1.3
COUNSELOR 1217	110	5	1	5	0.06	12	1.0	12	150	0.08	150	0	1.26	12.82	VAV E1.4
COUNSELOR 1213	123	5	1	5	0.06	12	1.0	12	150	0.08	150	0	1.26	13.68	VAV E1.4
LOBBY	1095	0	0	0	0.06	66	1.0	66	2000	0.03	2000	0	1.31	72.58	VAV E1.5
TOTAL	**2983**		**56**			**711.58**		**711.58**	**4200**		**4050**	**200**	**0.91**	**786**	
								Vou	**Vps**				**Ev**		
						CORRECTED TOTAL OUTDOOR AIR FLOW RATE			**786**	**CFM**	**Corrected OSA Fractio**		**Zs =**	**0.19**	

VENTILATION AIR SCHEDULE - AHU-E2

SCIENCE CLASSROOM 1102	1131	35	40	10	0.12	536	1.0	536	1200	0.45	1200	0	0.89	599.42	VAV E2.1
W. HALLWAY 1151	500	0	0	0	0.06	30	1.0	30	500	0.06	500	0	1.28	33.57	VAV E2.1
SCIENCE PREP/CLASS/OFFICE 1219	365	25	10	10	0.18	166	1.0	166	400	0.41	0	500	0.93	185.40	VAV E2.2
W. HALLWAY 1151	500	0	0	0	0.06	30	1.0	30	500	0.06	500	0	1.28	33.57	VAV E2.2
RR 1272	50	0	0	0	0	0	1.0	0	50	0.00	0	75	1.34	0.00	VAV E2.2
FAN 1281	68	5	1	5	0.06	9	1.0	9	75	0.12	0	75	1.22	10.16	VAV E2.2
SCIENCE CLASSROOM 1102	1131	35	40	10	0.12	536	1.0	536	1200	0.45	1200	0	0.89	599.42	VAV E2.3
EAST HALLWAY	680	0	0	0	0.06	41	1.0	41	500	0.08	500	0	1.26	45.65	VAV E2.4
WORK/BREAK/MAIL 102	102	5	1	5	0.06	11	1.0	11	100	0.11	100	0	1.23	12.44	VAV E2.4
NURSE OFFICE 1211	75	5	1	5	0.06	10	1.0	10	100	0.10	100	0	1.25	10.63	VAV E2.4
NURSE EXAM 1206	106	5	1	5	0.06	11	1.0	11	100	0.11	100	0	1.23	12.71	VAV E2.4
NURSE OFFICE 1211	91	5	1	5	0.06	10	1.0	10	100	0.10	100	0	1.24	11.70	VAV E2.4
RR 1271	50	0	0	0	0	0	1.0	0	50	0.00	0	75	1.34	0.00	VAV E2.4
CUST/FIRE/ALARM 1208	76	0	0	0	0	0	1.0	0	100	0.00	0	125	1.34	0.00	VAV E2.4
HALLWAY 1256	250	0	0	0	0.06	15	1.0	15	100	0.15	100	0	1.19	16.78	VAV E2.5
OFFICE MANAGER 1205	101	5	1	5	0.06	11	1.0	11	150	0.07	150	0	1.27	12.38	VAV E2.5
PRINICIPAL 1207	150	5	1	5	0.06	14	1.0	14	180	0.08	180	0	1.26	15.66	VAV E2.5
V. PRINCIPAL 1209	154	5	1	5	0.06	14	1.0	14	180	0.08	180	0	1.26	15.93	VAV E2.5
ATTENDANCE 1202	184	20	4	5	0.06	31	1.0	31	300	0.10	300	0	1.24	34.73	VAV E2.6
WAITING	216	30	7	5	0.06	48	1.0	48	300	0.16	300	0	1.18	53.66	VAV E2.6
TOTAL	**5980**		**109**			**1522.76**		**1523**	**6185**		**5510**	**850**	**0.89**	**1704**	
								Vou	**Vps**				**Ev**		
						CORRECTED TOTAL OUTDOOR AIR FLOW RATE			**1704**	**CFM**	**Corrected OSA Fractio**		**Zs =**	**0.28**	

VAV BOXES WITH HOT WATER REHEAT

MARK NO.	TYPE	MAX COOLING CFM	20% OF COOLING CFM	MIN VENTILATION CFM	MIN 300 CFM	MAXIMUM DEADBAND CFM	MAXIMUM HEATING CFM 50% or VENT	HEATING CFM *** (CFM)	INLET IN.	OUTLET IN.	SA INLET TEMP DEG. F	SA TEMP AT HEATING DEG. F	REHEAT COIL LOAD MBH	INLET WATER TEMP (F)	OUTLET WATER TEMP (F)	GPM	CONN. SIZE IN.	VALVE TYPE	MAX. STATIC LOSS *	MAX. DISCHARGE SOUND POWER LEVEL **	MAX. RADIATED SOUND POWER LEVEL **	CONTROL TYPE
VAV-E1.1	VAV	**1200**	240	522	0	**522**	**600**	**1200**	**12**	16X15	55	85	38.9	140	110	**2.6**	3/4	2-WAY CONTROL VALVE	0.75	67	59	DDC
VAV-E1.2	VAV	**250**	50	22	125	**125**	**125**	**125**	**6**	12X8	55	100	6.1	140	110	**0.4**	1/2	2-WAY CONTROL VALVE	0.75	67	59	DDC
VAV-E1.3	VAV	**450**	90	88	0	**90**	**225**	**225**	**8**	12X10	55	100	10.9	140	110	**0.7**	1/2	2-WAY CONTROL VALVE	0.75	67	59	DDC
VAV-E1.4	VAV	**300**	60	27	150	**150**	**150**	**150**	**6**	12X8	55	100	7.3	140	110	**0.5**	1/2	2-WAY CONTROL VALVE	0.75	67	59	DDC
VAV-E1.5	VAV	**2000**	400	66	0	**400**	**1000**	**1000**	**14**	20X16	55	100	48.6	140	110	**3.2**	3/4	2-WAY CONTROL VALVE	0.75	67	59	DDC
	TOTAL	**4200**				**1287**	**2100**	**2700**					**111.78**			**7.5**						
VAV-E2.1	VAV	**1700**	340	625	0	**625**	**850**	**1700**	**14**	20X16	55	85	55.1	140	110	**3.7**	3/4	2-WAY CONTROL VALVE	0.75	67	59	DDC
VAV-E2.2	VAV	**1025**	205	265	0	**265**	**513**	**513**	**12**	16X15	55	100	24.9	140	110	**1.7**	3/4	2-WAY CONTROL VALVE	0.75	67	59	DDC
VAV-E2.3	VAV	**1200**	240	592	0	**592**	**600**	**1200**	**12**	16X15	55	85	38.9	140	110	**2.6**	3/4	2-WAY CONTROL VALVE	0.75	67	59	DDC
VAV-E2.4	VAV	**1050**	210	92	0	**210**	**525**	**525**	**12**	16X15	55	100	25.5	140	110	**1.7**	3/4	2-WAY CONTROL VALVE	0.75	67	59	DDC
VAV-E2.5	VAV	**610**	122	60	0	**122**	**305**	**305**	**8**	12X10	55	100	14.8	140	110	**1.0**	1/2	2-WAY CONTROL VALVE	0.75	67	59	DDC
VAV-E2.6	VAV	**600**	120	64	0	**120**	**300**	**300**	**8**	12X10	55	100	14.6	140	110	**1.0**	1/2	2-WAY CONTROL VALVE	0.75	67	59	DDC
	TOTAL	**6185**				**1934**	**3092.5**	**4543**					**174**			**11.6**						

* - INCLUDING COIL, SOUND ATTENUATOR SECTION & VAV BOX
** - THIRD OCTAVE CERTIFIED RATING IN ACCORDANCE WITH ARI STANDARD 880-94
*** - SCIENCE CLASSROOM VAV BOXES. DAMPER OPEN 100% WHEN EXHAUST FAN IS ACTIVATED. HEATING COIL MUST BE SIZED FOR COOLING AIRFLOW WHEN EXHAUST FAN IS ON.

#	Date	Description

Revision Schedule

65% PROGRESS SET

PILOT BUTTE MIDDLE SCHOOL - BLDGS E&F
1501 NE Neff Road,
Bend OR 97701

BLRB architects

Drawing Title:
MECHANICAL LEGEND AND SCHEDULES

Date: 11.11.2017
Drawn By: INITIALS
Revised Date:
Project No. 17.34B
Stamp
Sheet No. M6.01

BLRB ARCHITECTS, P.S.

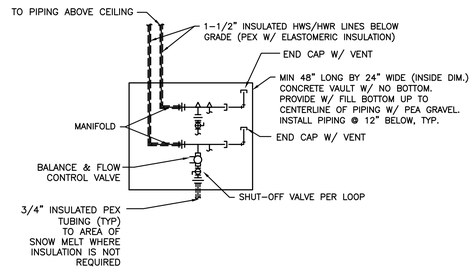

1 M6.02 SNOW MELT MANIFOLD
SCALE: DETAIL

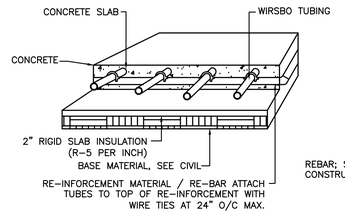

2 M6.02 SNOW MELT UNDERSLAB PIPING DETAIL
DETAIL

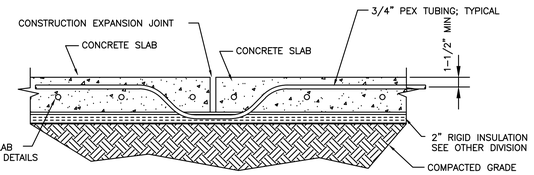

3 M6.02 SNOW MELT @ EXPANSION JOINT
SCALE: DETAIL

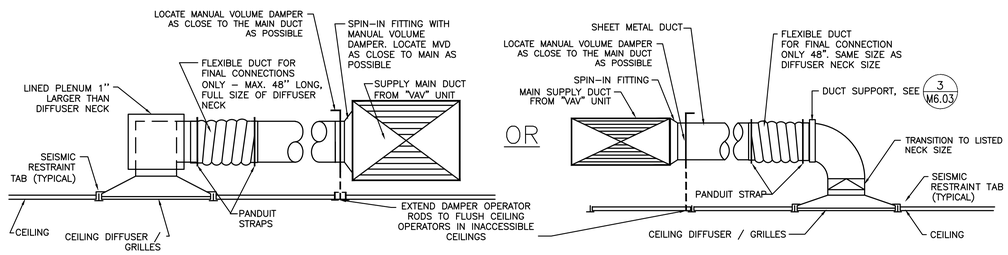

5 M6.02 SUPPLY AIR DIFFUSER/GRILLE
SCALE: DETAIL

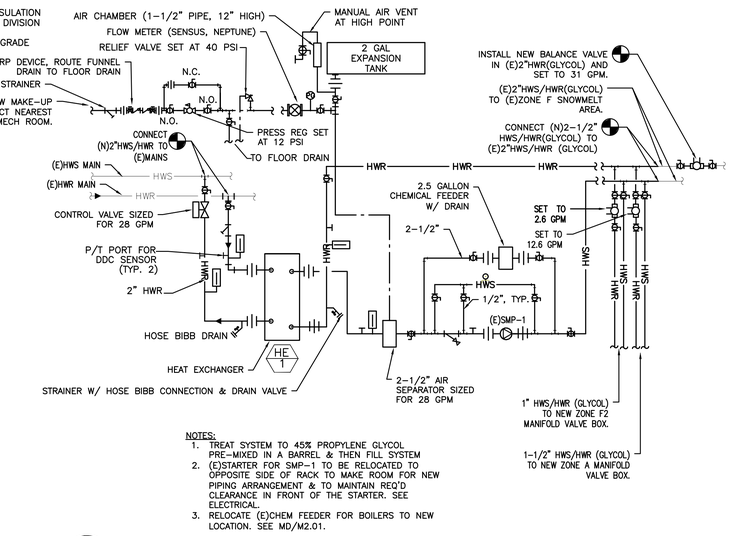

NOTES:
1. TREAT SYSTEM TO 45% PROPYLENE GLYCOL PRE-MIXED IN A BARREL & THEN FILL SYSTEM
2. (E)STARTER FOR SMP-1 TO BE RELOCATED TO OPPOSITE SIDE OF RACK TO MAKE ROOM FOR NEW PIPING ARRANGEMENT & TO MAINTAIN REQ'D CLEARANCE IN FRONT OF THE STARTER. SEE ELECTRICAL.
3. RELOCATE (E)CHEM FEEDER FOR BOILERS TO NEW LOCATION. SEE MD/M2.01.

4 M6.02 HEAT EXCHANGER PIPING DIAGRAM FOR SNOWMELT SYSTEM
NTS

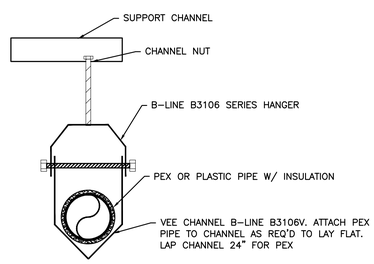

6 M6.02 PEX SUPPORT DETAIL
SCALE: DETAIL

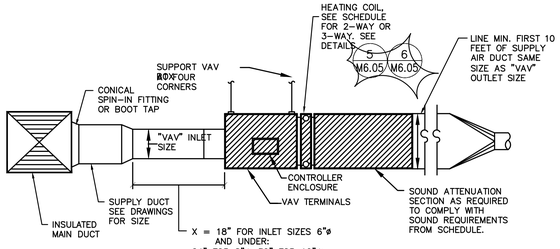

7 M6.02 TYPICAL VAV BOX DETAIL
NTS

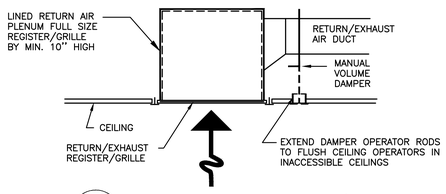

8 M6.02 RETURN AIR DIFFUSER/GRILLE
SCALE: DETAIL

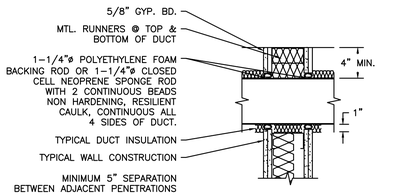

DUCT PENETRATION OF DRYWALL CONSTRUCTION

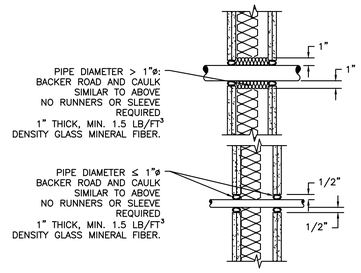

PIPE/CONDUIT PENETRATION DRYWALL CONSTRUCTION
TO BE APPLIED TO WALLS WITH STC ≥ 49

SEE ARCHITECTURAL DRAWINGS FOR ACOUSTICALLY IMPORTANT WALLS (WALL TYPES). SEAL PENETRATIONS IN THOSE WALLS PER THESE DETAILS

11 M6.02 ACOUSTICAL DUCT PENETRATION
SCALE: DETAIL

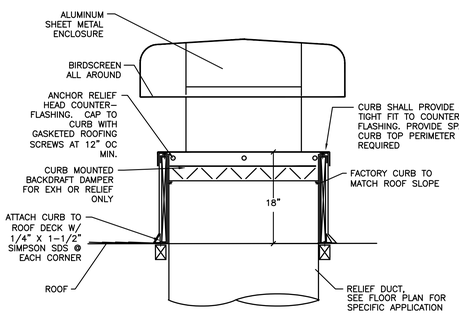

9 M6.02 RELIEF HEAD
SCALE: DETAIL

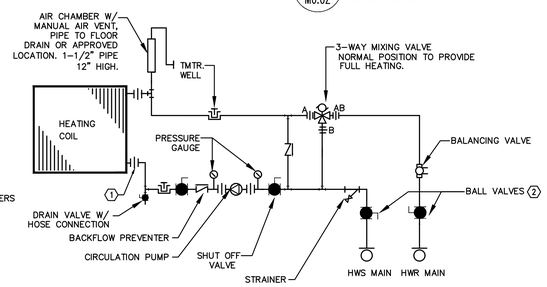

KEYED NOTES:
1 - PROVIDE BUTTERFLY VALVES FOR PIPING 2-1/2" AND LARGER, AND BALL VALVES FOR PIPING 2" AND SMALLER.
2 - PROVIDE DIELECTRIC UNION BETWEEN DISSIMILAR PIPING MATERIALS.

10 M6.02 PREAHEAT COIL- THREE WAY NON-FREEZE
NTS

City Of Bend Approval Stamp:

#	Date	Description

Revision Schedule

65% PROGRESS SET

PILOT BUTTE MIDDLE SCHOOL - BLDGS E&F
1501 NE Neff Road,
Bend OR 97701

BLRB architects

Drawing Title:
MECHANICAL DETAILS

Date : 11.11.2017	Drawn By : INITIALS
Revised Date :	Project No. 17.34B
Stamp	Sheet No. M6.02

BLRB ARCHITECTS, P.S.

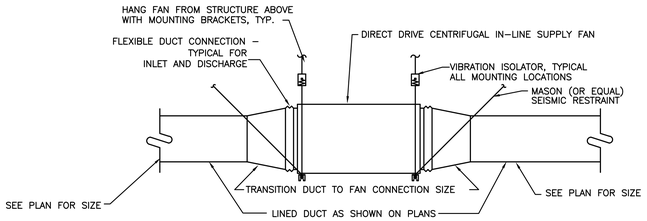

2 M6.03 INLINE EXH FAN/RA FAN
SCALE: DETAIL

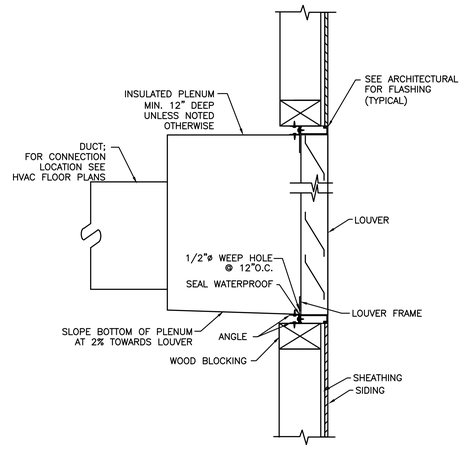

3 M6.03 RELIEF LOUVER DETAIL
NTS

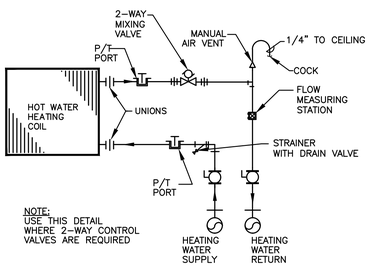

2–WAY CONTROL VALVE

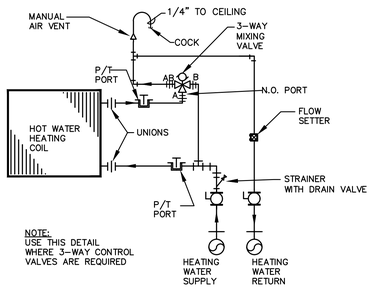

END OF LOOP: 3–WAY MIXING VALVE

4 M6.03 REHEATING COIL PIPING DIAGRAM
NTS

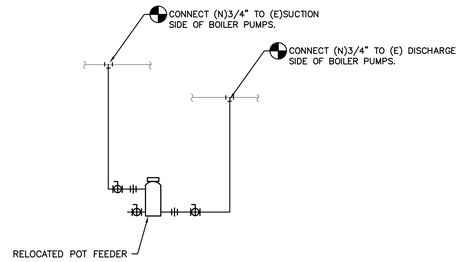

5 M6.03 CHEMICAL POT FEEDER
NTS

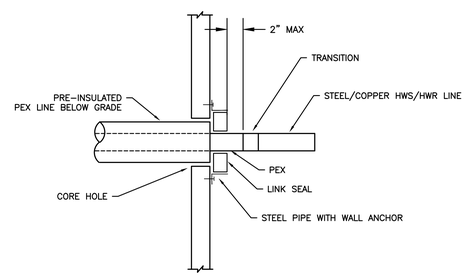

6 M6.03 PIPE PENETRATION THRU STEM WALL
NTS

City Of Bend Approval Stamp:

#	Date	Description

Revision Schedule

65% PROGRESS SET

PILOT BUTTE MIDDLE SCHOOL - BLDGS E&F
1501 NE Neff Road,
Bend OR 97701

BLRB architects

Drawing Title:
MECHANICAL DETAILS

Date : 11.11.2017	Drawn By : INITIALS
Revised Date :	Project No. 17.34B
Stamp	Sheet No. M6.03

BLRB ARCHITECTS, P.S.

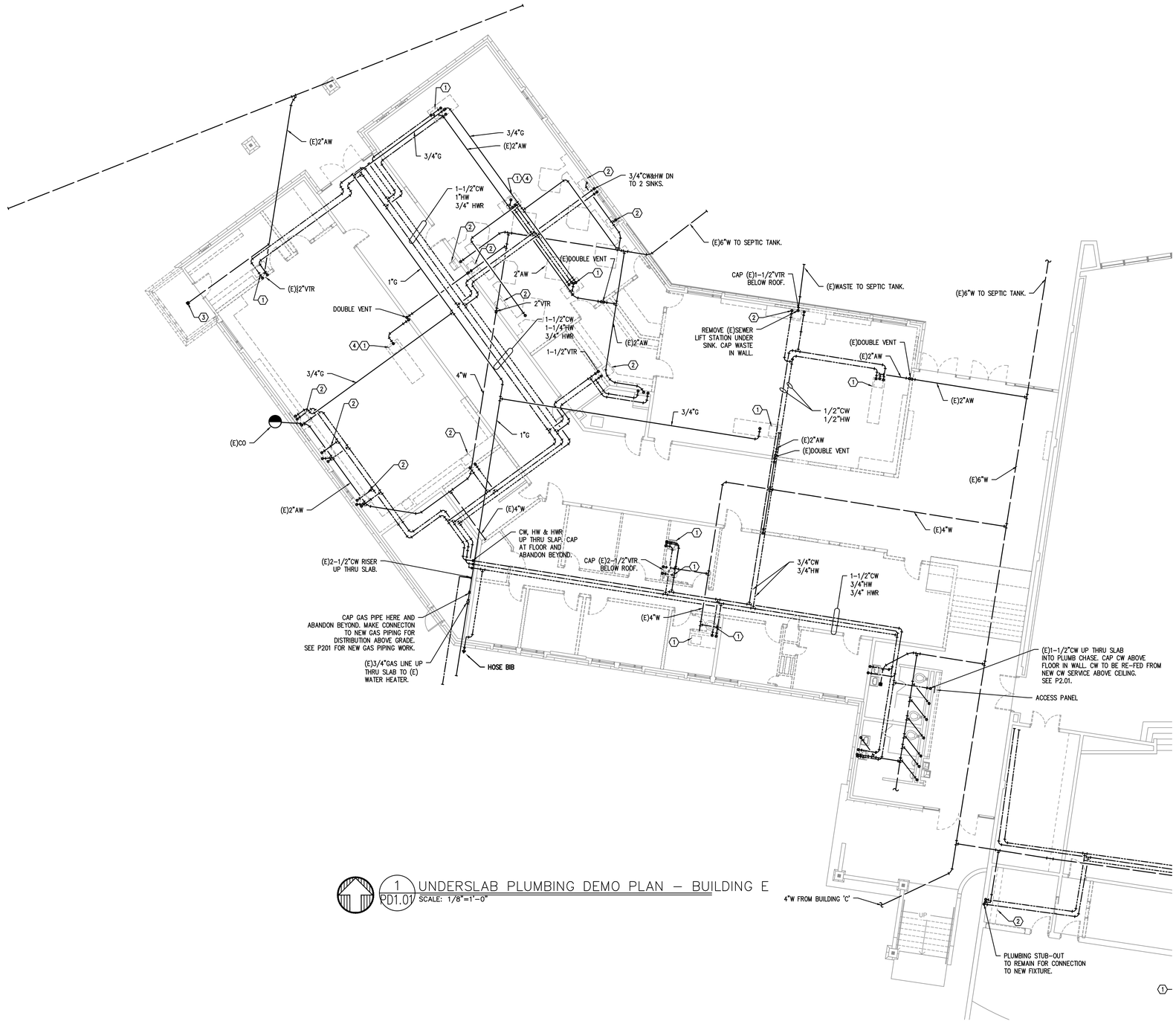

1 PD1.01 UNDERSLAB PLUMBING DEMO PLAN – BUILDING E
SCALE: 1/8"=1'-0"

City Of Bend Approval Stamp:

KEYED NOTES:

1. REMOVE PLUMBING FIXTURE. CAP WASTE BELOW FLOOR.
2. REMOVE PLUMBING FIXTUIRE. CAP WASTE IN WALL.
3. REMOVE (E)FLOOR DRAIN. PROVIDE NEW CLEAN-OUT AT END OF LINE.

GENERAL NOTES:

1. ABANDON ALL UNDERSLAB CW, HW, HWR AND GAS PIPING IN PLACE EXCEPT FOR EXISTING BOYS/GIRLS RESTROOMS. DEMO ALL GALVANIZED DOMESTIC WATER PIPING ABOVE GRADE FOR REPLACEMENT WITH NEW COPPER OR PEX LINES.

#	Date	Description

Revision Schedule

65% PROGRESS SET

PILOT BUTTE MIDDLE SCHOOL - BLDGS E&F

1501 NE Neff Road,
Bend OR 97701

BLRB architects

Drawing Title:
UNDERSLAB PLUMBING DEMO PLAN - BUILDING E

Date : 11.11.2017	Drawn By : INITIALS
Revised Date :	Project No. 17.34B
Stamp	Sheet No. PD1.01

MFIA INC.
Consulting Engineers
2007 S.E. Ash St.
Portland, OR 97214
PHN: (503) 234-0548
FAX: (503) 234-0677
WWW.MFIA-ENG.COM
CONTACT: TAKAKO BAKER

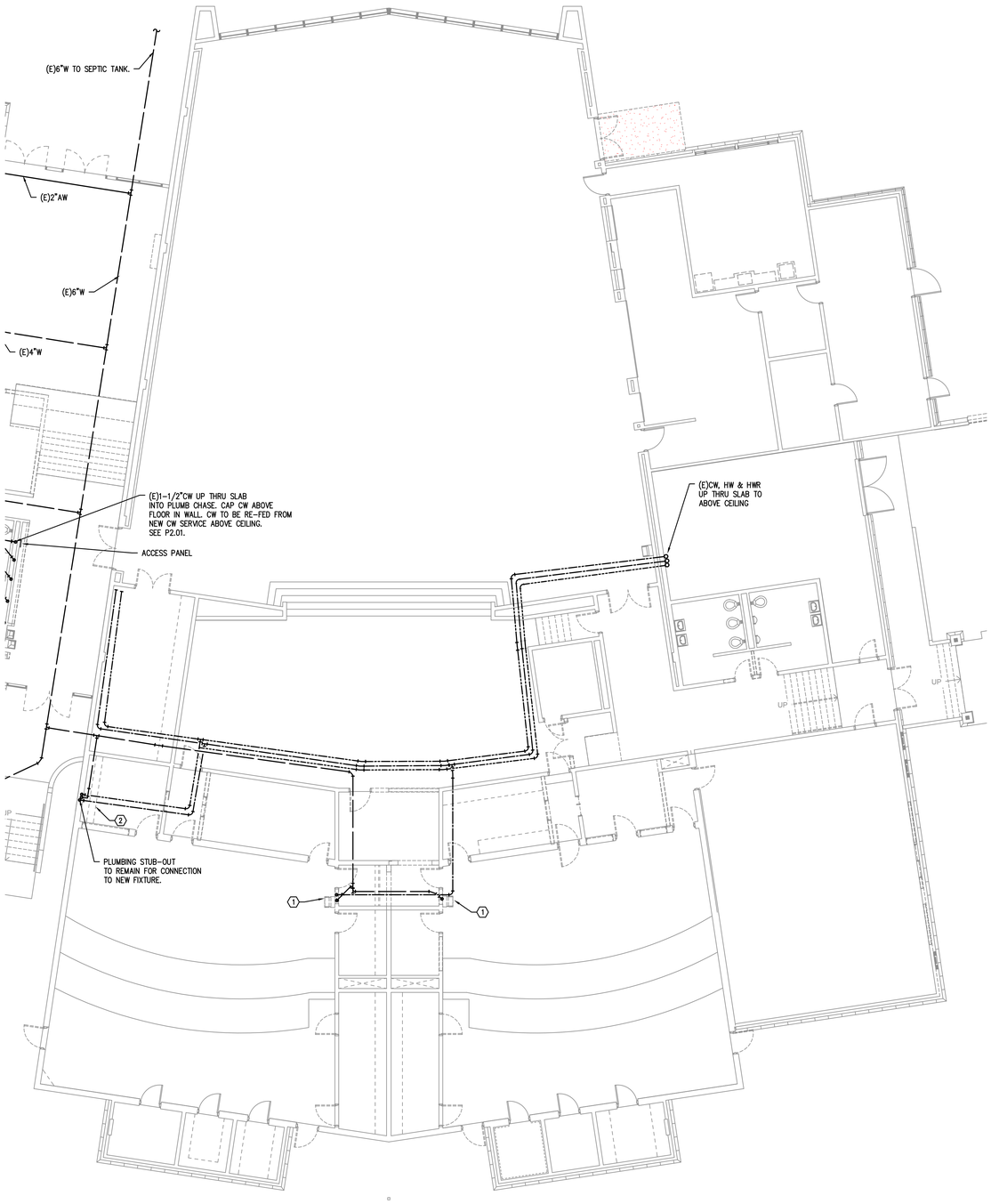

1 / PD1.02 UNDERSLAB PLUMBING DEMO PLAN – BUILDING F
SCALE: 1/8"=1'-0"

City Of Bend Approval Stamp:

KEYED NOTES:

1. REMOVE PLUMBING FIXTURE. CAP WASTE BELOW FLOOR.
2. REMOVE PLUMBING FIXTUIRE. CAP WASTE IN WALL.

GENERAL NOTES:

1.

#	Date	Description

Revision Schedule

65% PROGRESS SET

PILOT BUTTE MIDDLE SCHOOL - BLDGS E&F

1501 NE Neff Road,
Bend OR 97701

BLRB architects

Drawing Title:
PLUMBING UNDERSLAB DEMO PLAN - BUILDING F

Date : 11.11.2017	Drawn By : INITIALS
Revised Date :	Project No. 17.34B
Stamp	Sheet No. PD1.02

MFIA INC. Consulting Engineers
2007 S.E. Ash St.
Portland, OR 97214
PHN: (503) 234-0548
FAX: (503) 234-0677
WWW.MFIA-ENG.COM
CONTACT: TAKAKO BAKER

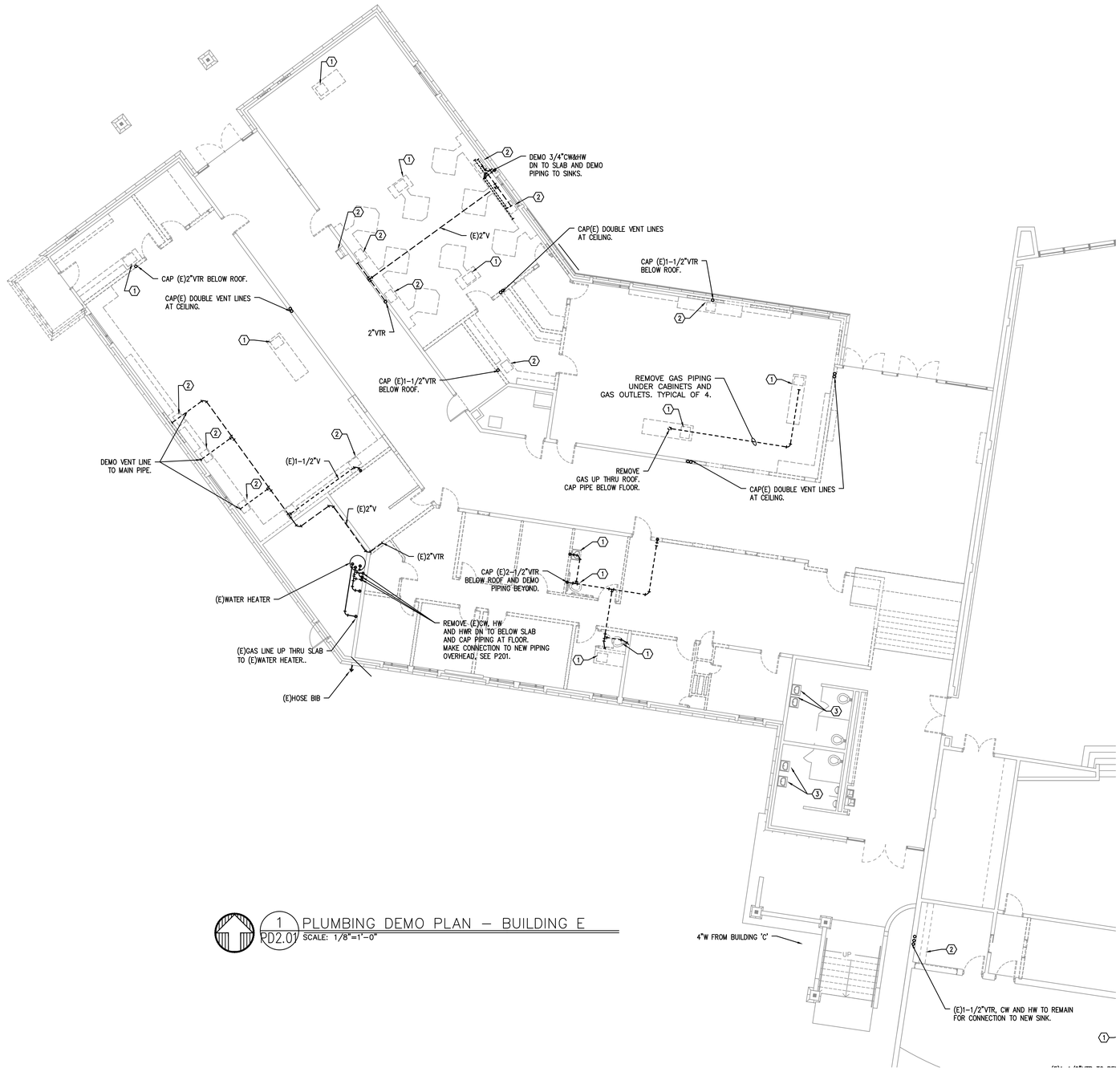

1 PD2.01 PLUMBING DEMO PLAN – BUILDING E
SCALE: 1/8"=1'-0"

City Of Bend Approval Stamp:

KEYED NOTES:

1. REMOVE PLUMBING FIXTURE. DEMO CW & HW LINES AND ABANDON PIPES TO BELOW SLAB. ALL PIPING BEYOND TO BE ABANDONED IN PLACE.
2. REMOVE PLUMBING FIXTURE. DEMO CW&HW PIPE TO WALL. ALL PIPING BEYOND TO BE ABANDONED IN PLACE.
3. REMOVE CW&HW CONNECTIONS FROM (E)LAV AND CAP 1/2"CW&HW LINE FROM BELOW SLAB IN WALL.

#	Date	Description

Revision Schedule

65% PROGRESS SET

PILOT BUTTE MIDDLE SCHOOL - BLDGS E&F
1501 NE Neff Road,
Bend OR 97701

BLRB architects

Drawing Title:

PLUMBING DEMO PLAN - BUILDING E

Date : 11.11.2017	Drawn By : INITIALS
Revised Date :	Project No. 17.34B
Stamp	Sheet No. PD2.01

MFIA INC.
Consulting Engineers
2007 S.E. Ash St.
Portland, OR 97214
PHN: (503) 234-0548
FAX: (503) 234-0677
WWW.MFIA-ENG.COM
CONTACT: TAKAKO BAKER

1. REMOVE PLUMBING FIXTURE. DEMO CW & HW LINES AND ABANDON PIPES TO BELOW SLAB. ALL PIPING BEYOND TO BE ABANDONED IN PLACE.
2. REMOVE PLUMBING FIXTURE. DEMO CW&HW PIPE TO WALL. ALL PIPING BEYOND TO BE ABANDONED IN PLACE.

City Of Bend Approval Stamp:

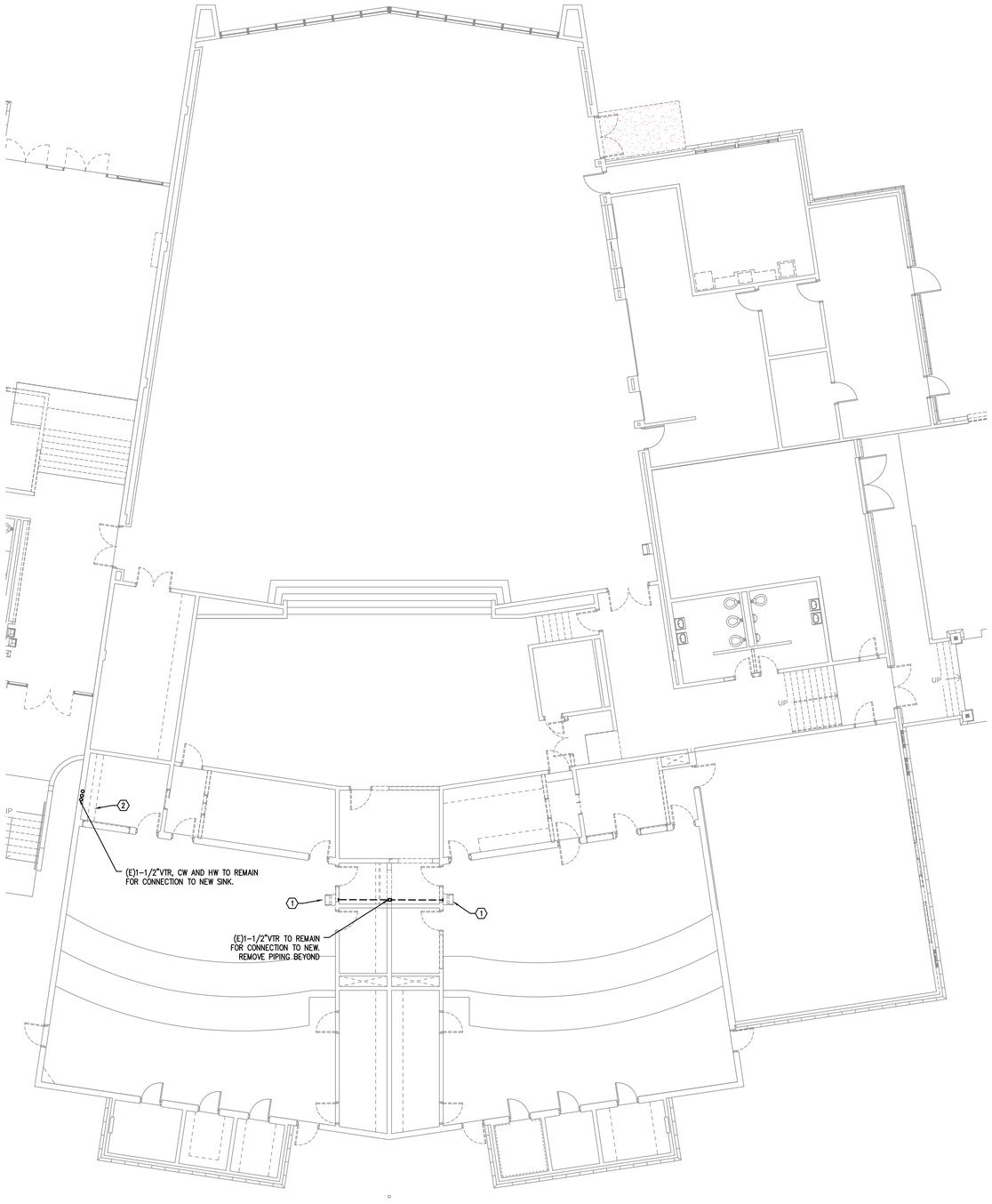

1 PD2.02 PLUMBING DEMO PLAN – BUILDING F
SCALE: 1/8"=1'-0"

#	Date	Description

Revision Schedule

65% PROGRESS SET

PILOT BUTTE MIDDLE SCHOOL - BLDGS E&F
1501 NE Neff Road,
Bend OR 97701

BLRB architects

Drawing Title:
PLUMBINGL DEMO PLAN
BUILDING F

Date : 11.11.2017	Drawn By : INITIALS
Revised Date :	Project No. 17.34B
Stamp	Sheet No. PD2.02

MFIA INC. Consulting Engineers
2007 S.E. Ash St.
Portland, OR 97214
PHN: (503) 234-0548
FAX: (503) 234-0677
WWW.MFIA-ENG.COM
CONTACT: TAKAKO BAKER

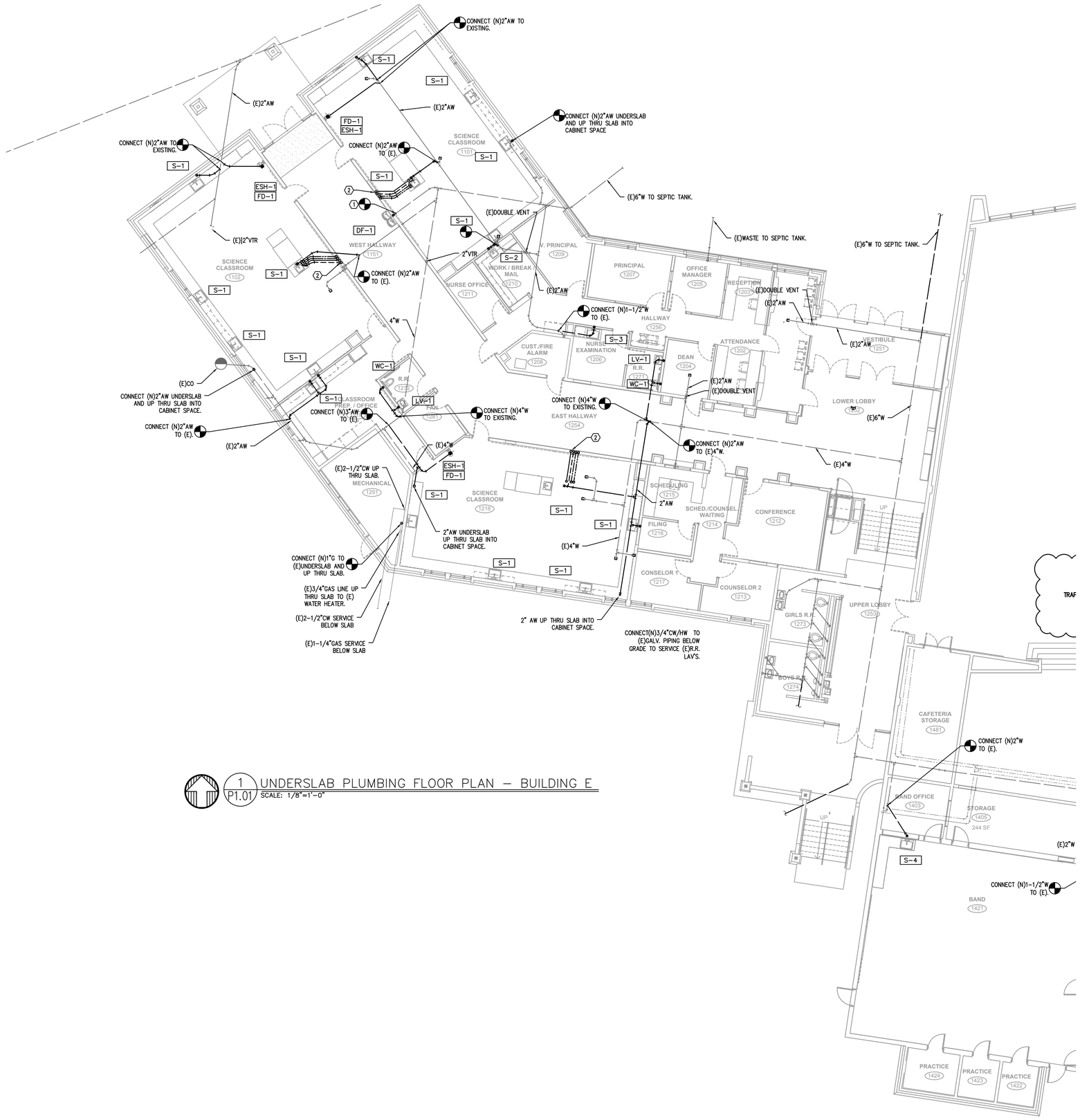

1 P1.01 UNDERSLAB PLUMBING FLOOR PLAN – BUILDING E
SCALE: 1/8"=1'-0"

City Of Bend Approval Stamp:

KEYED NOTES:
1. CONNECT (E)WASTE TO NEW PLUMBING FIXTURE.
2. 1/2"G, 1/2"CW&HW AND 1-1/2"V TO ISLAND PLUMBING FIXTURE UP IN WALL.

#	Date	Description
Revision Schedule		

65% PROGRESS SET

PILOT BUTTE MIDDLE SCHOOL - BLDGS E&F
1501 NE Neff Road,
Bend OR 97701

BLRB architects

Drawing Title:
UNDERSLAB PLUMBING FLOOR PLAN - BUILDING E

Date : 11.11.2017	Drawn By : INITIALS
Revised Date :	Project No. 17.34B
Stamp	Sheet No. P1.01

MFIA INC. Consulting Engineers
2007 S.E. Ash St.
Portland, OR 97214
PHN: (503) 234-0548
FAX: (503) 234-0677
WWW.MFIA-ENG.COM
CONTACT: TAKAKO BAKER

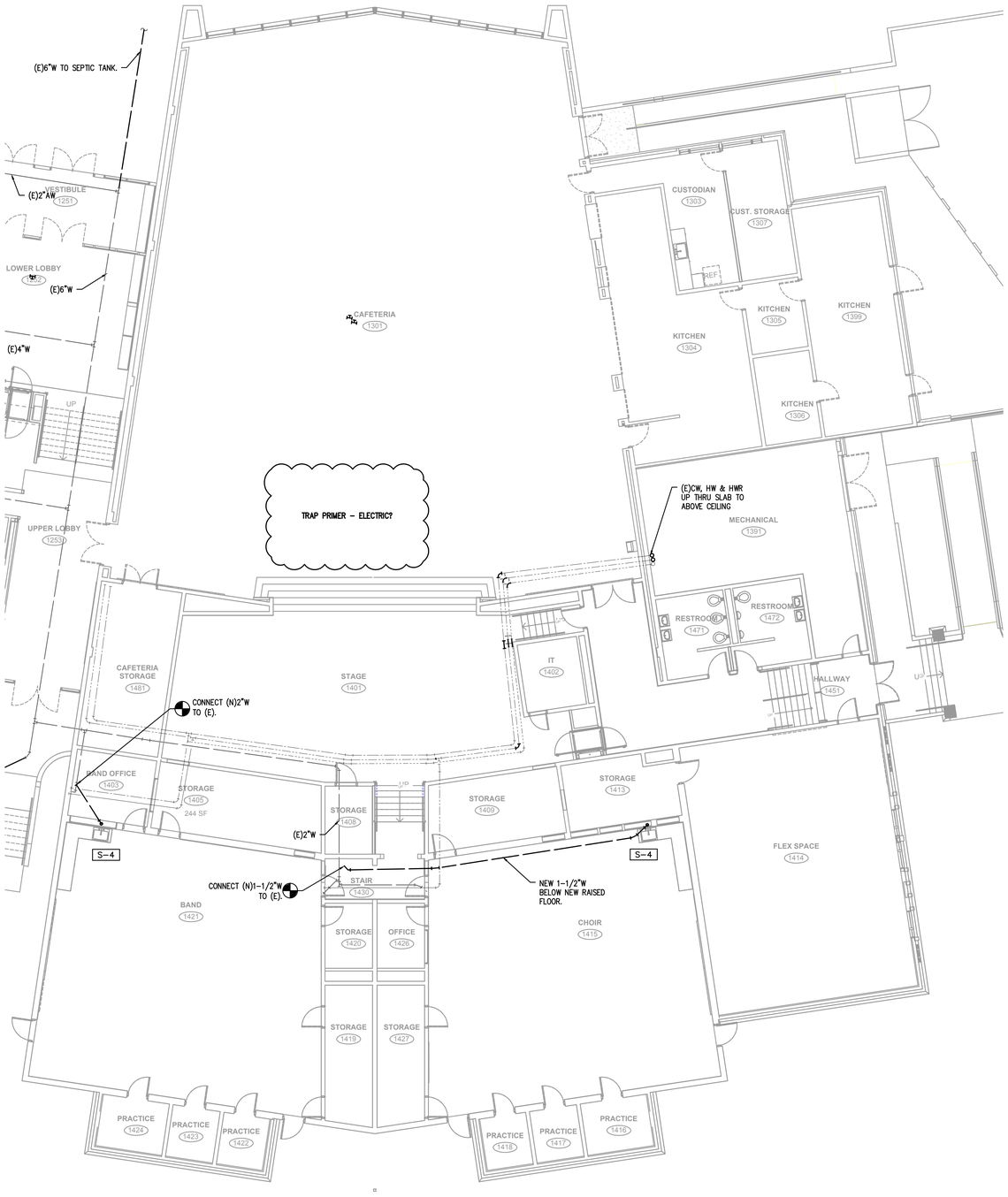

1 P1.02 UNDERSLAB PLUMBING FLOOR PLAN – BUILDING F
SCALE: 1/8"=1'-0"

City Of Bend Approval Stamp:

#	Date	Description

Revision Schedule

65% PROGRESS SET

PILOT BUTTE MIDDLE SCHOOL - BLDGS E&F
1501 NE Neff Road,
Bend OR 97701

BLRB architects

Drawing Title:
UNDERSLAB PLUMBING FLOOR PLAN - BUILDING F

Date : 11.11.2017	Drawn By : INITIALS
Revised Date :	Project No. 17.34B
Stamp	Sheet No. P1.02

MFIA INC.
Consulting Engineers
2007 S.E. Ash St.
Portland, OR 97214
PHN: (503) 234-0548
FAX: (503) 234-0677
WWW.MFIA-ENG.COM
CONTACT: TAKAKO BAKER

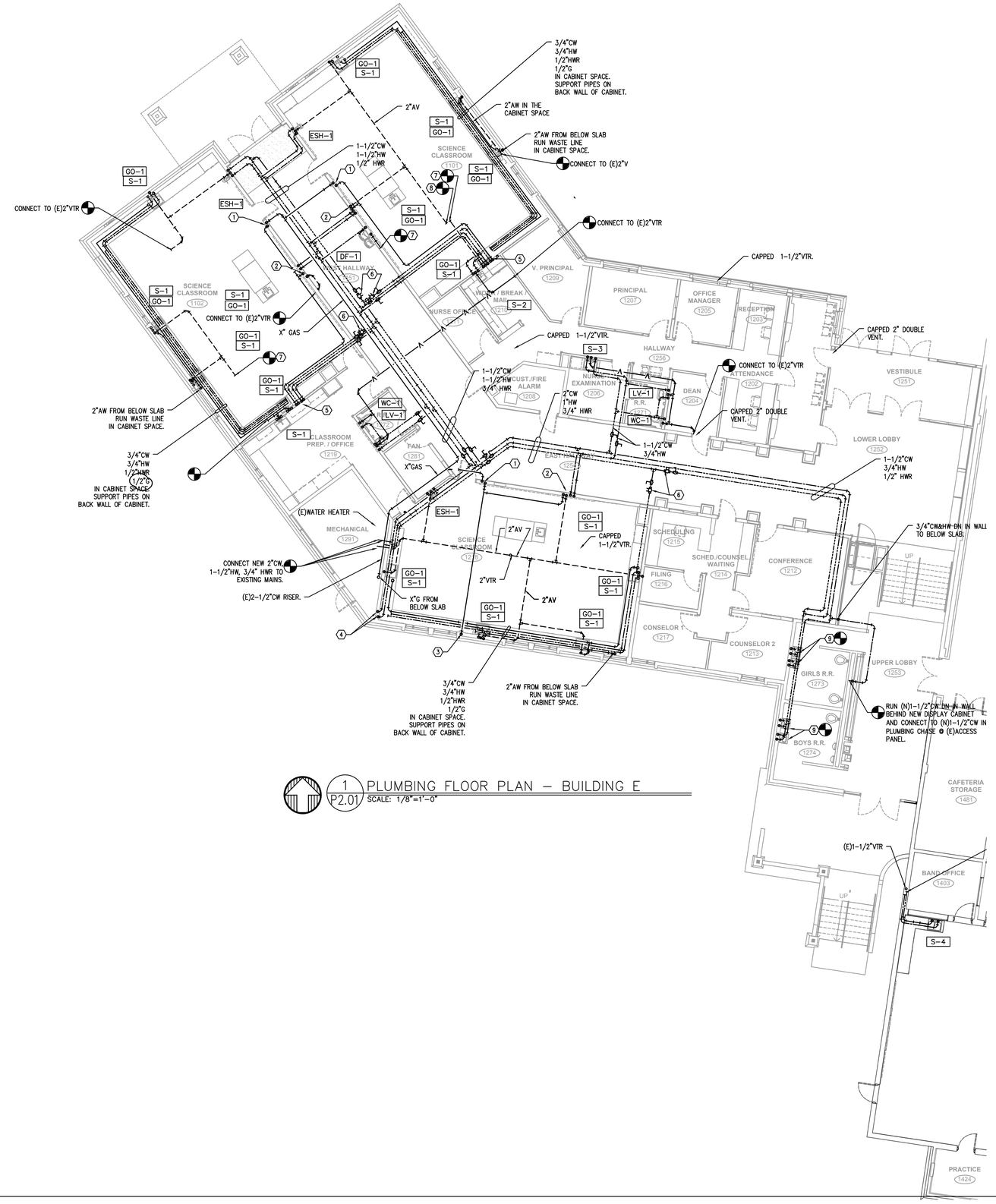

1 P2.01 PLUMBING FLOOR PLAN – BUILDING E
SCALE: 1/8"=1'-0"

KEYED NOTES:

1. 1. SCIENCE CLASSROOM EMERGENCY GAS SHUT-OFF. SEE 6/P6.01 FOR DETAIL.
2. 1-1/2"V, 1/2"CW/HW AND 1/2"G DN IN WALL AND UNDERSLAB TO ISLAND FIXTURE.
3. 3/4"GD DN IN WALL TO CABINET SPACE.
4. 3/4"CW/HW DN IN WALL TO CABINET SPACE.
5. 3/4"CW & HW, 1/2" HWR DN IN WALL TO CABINET SPACE.
6. BALANCE VALVE, SET TO 0.5 GPM.
7. CONNECT (N)1-1/2"AV TO (E).
8. CONNECT (N)2"AV TO (E).
9. CONNECT 1/2"CW&HW TO EXISTING LAV.

City Of Bend Approval Stamp:

#	Date	Description

Revision Schedule

65% PROGRESS SET

PILOT BUTTE MIDDLE SCHOOL - BLDGS E&F
1501 NE Neff Road,
Bend OR 97701

BLRB architects

Drawing Title:
PLUMBING FLOOR PLAN
- BUILDING E

Date : 11.11.2017	Drawn By : INITIALS
Revised Date :	Project No. 17.34B
Stamp	Sheet No. P2.01

MFIA INC. Consulting Engineers
2007 S.E. Ash St.
Portland, OR 97214
PHN: (503) 234-0548
FAX: (503) 234-0677
WWW.MFIA-ENG.COM
CONTACT: TAKAKO BAKER

BLRB ARCHITECTS, P.S.

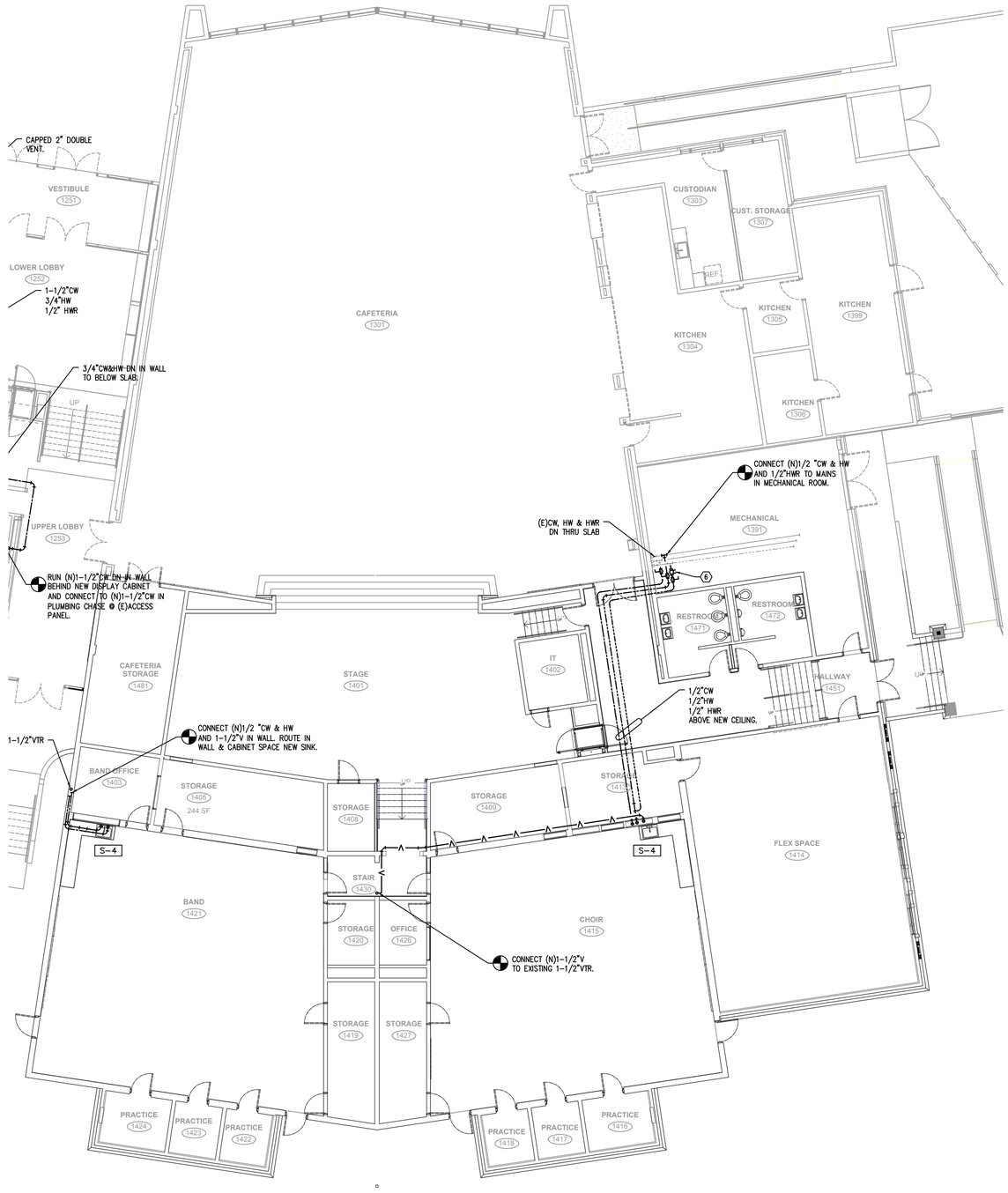

1 P2.02 PLUMBING FLOOR PLAN – BUILDING F
SCALE: 1/8"=1'-0"

City Of Bend Approval Stamp:

#	Date	Description

Revision Schedule

65% PROGRESS SET

PILOT BUTTE MIDDLE SCHOOL - BLDGS E&F
1501 NE Neff Road,
Bend OR 97701

BLRB architects

Drawing Title:
PLUMBING FLOOR PLAN
BUILDING F

Date : 11.11.2017	Drawn By : INITIALS
Revised Date :	Project No. 17.34B
Stamp	Sheet No. P2.02

MFIA INC. Consulting Engineers
2007 S.E. Ash St.
Portland, OR 97214
PHN: (503) 234-0548
FAX: (503) 234-0677
WWW.MFIA-ENG.COM
CONTACT: TAKAKO BAKER

PLUMBING LEGEND

AFF	ABOVE FINISHED FLOOR
ARCH	ARCHITECTURAL
B.G.	BELOW GRADE
BTU	BRITISH THERMAL UNIT
CAP.	CAPACITY
C.I.	CAST IRON
COMP.	COMPARTMENT
CONT.	CONTINUATION
CU.	CUBIC
DF	DRINKING FOUNTAIN
DI	DEIONIZED (WATER)
DIA.	DIAMETER
ELEV.	ELEVATION
EWC	ELECTRIC WATER COOLER
FD	FLOOR DRAIN
FDC	FIRE DEPARTMENT CONNECTION
F.F.	FINISH FLOOR
FLG.	FLANGE
FT	FOOT / FEET
G	GAS
GA.	GAUGE
GALV.	GALVANIZED
GPM	GALLONS PER MINUTE
G.V.	GATE VALVE
HP	HORSEPOWER
HR.	HOUR
I.E.	INVERT ELEVATION
kW	KILOWATT
LAV	LAVATORY
LBS	POUNDS
MAX.	MAXIMUM
MBH	THOUSANDS OF BTUs PER HOUR
MIN.	MINIMUM
M.J.	MECHANICAL JOINT
N.I.M.	NOT IN MECHANICAL
OS&Y	OUTSIDE STEM & YOKE
PROT.	PROTECTION
PRV	PRESSURE REDUCING VALVE
PSI, PSIG	POUNDS PER SQUARE INCH
P/T	PRESSURE / TEMPERATURE
REQ'D	REQUIRED
RPBP	REDUCED PRESSURE BACKFLOW PREVENTER
RPM	REVOLUTIONS PER MINUTE
TYP.	TYPICAL
UR	URINAL
VTR	VENT THROUGH ROOF
WC	WATER CLOSET

(CW)	COLD WATER
(HW)	HOT WATER
(HWR)	HOT WATER RECIRC
(HT)	HOT WATER HEAT TRACED
(W)	BELOW GRADE WASTE
(W)	ABOVE GRADE WASTE
(V)	VENT
(AV)	ACID VENT
(RD)	RAIN DRAIN
(OD)	OVERFLOW RAIN DRAIN
(FDC)	FIRE DEPARTMENT CONNECTION
(A)	COMPRESSED AIR
(PHW)	PROCESS HOT WATER
(PCW)	PROCESS COLD WATER
VACUUM	
(G)	NATURAL GAS
(F)	FIRE WATER
(GW)	GREASE WASTE
(AW)	ACID WASTE

X / XX	EQUIPMENT MARK NUMBER
XXX	FIXTURE MARK
(E)	EXISTING
#	NOTE
	CONNECT TO EXISTING
	CAP
	TEE
	ELBOW
	CLEANOUT
	PRESSURE/TEMP RELIEF VALVE
	BUTTERFLY VALVE
	GAS PRESSURE REGULATING VALVE
OR	TOP CONNECTION
	BOTTOM CONNECTION
	PIPE TURNED UP, PIPE TURNED DOWN
	GATE VALVE
OR	BALL VALVE
	BALANCING VALVE
	CHECK VALVE
	UNION
	DOUBLE CHECK ASSEMBLY

PLUMBING CONNECTION SCHEDULE

MARK	FIXTURE	W	V	CW	HW	REMARKS
ESH-1	EMERGENCY SHOWER AND EYE WASH	2"	V.L.	1-1/4"	1-1/4"	SEE SPECS, SEE 1/P6.01
~~LV-1~~	~~LAVATORY~~	~~1-1/2"~~	~~1-1/2"~~	~~1/2"~~	~~1/2"~~	~~WALL MOUNT, SEE SPECS.~~
S-1	SINK	1-1/2"	1-1/2"	1/2"	1/2"	SCIENCE CLASSROOM SINK
S-2	SINK	1-1/2"	1-1/2"	1/2"	1/2"	BREAKROOM
S-3	SINK	1-1/2"	1-1/2"	1/2"	1/2"	NURSE
S-4	SINK	1-1/2"	1-1/2"	1/2"	1/2"	BAND/CHOIR ROOM
GO-1	GAS OUTLET	---	---	---	---	1/2"G
WC-1	WATER CLOSET	3"	2"	1"		WALL MOUNT, FLUSH VALVE, ADA
FD-1	FLOOR DRAIN	2"	V.L.			J.R. SMITH 2005A (ROUND) OR EQUAL APPROVED.
DF-1	DRINKING FOUNTAIN	1-1/2"	1-1/2"	1/2"		DUAL HEIGHT, WITH BOTTLER FILLTER

* PROVIDE W/ WALL CLEAN-OUT BELOW EACH SINK

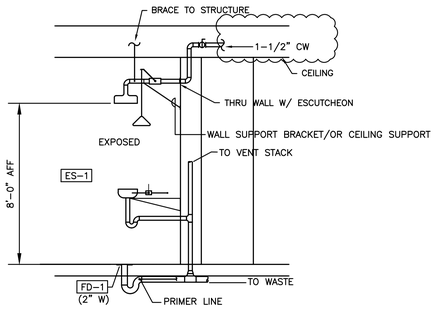

1 P6.01 EMERGENCY SHOWER/EYE WASH DETAIL
SCALE: DETAIL

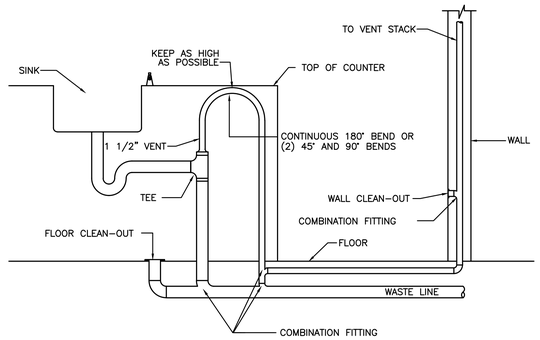

2 P6.01 ISLAND SINK
SCALE: DETAIL

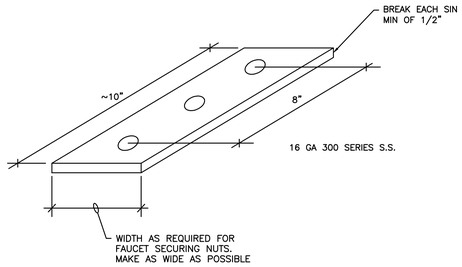

3 P6.01 SINK REINFORCEMENT
SCALE: DETAIL

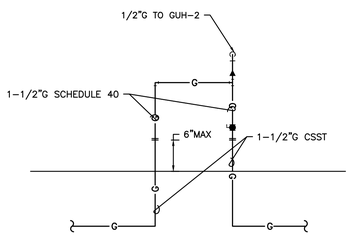

4 P6.01 GAS PIPING TRANSITION DETAIL
SCALE: DETAIL

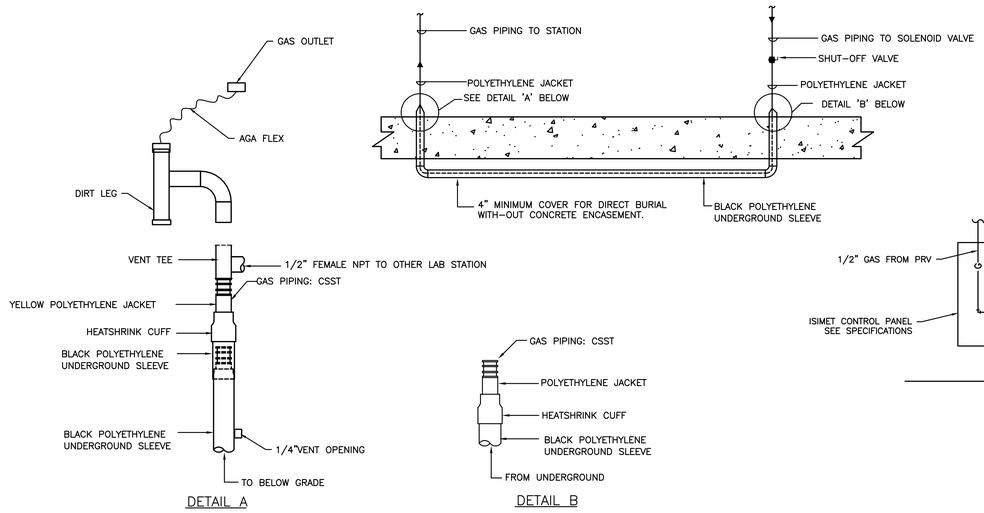

5 P6.01 GAS PIPING UNDERGROUND
NOT TO SCALE

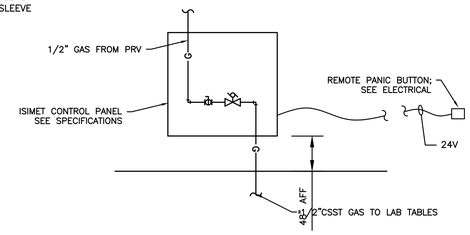

6 P6.01 LAB GAS VALVE
SCALE: DETAIL

City Of Bend Approval Stamp:

#	Date	Description

Revision Schedule

65% PROGRESS SET

PILOT BUTTE MIDDLE SCHOOL - BLDGS E&F
1501 NE Neff Road,
Bend OR 97701

BLRB architects

Drawing Title:
PLUMBING LEGEND AND SCHEDULES

Date : 11.11.2017	Drawn By : INITIALS
Revised Date :	Project No. 17.34B
Stamp	Sheet No. P6.01